EXPORT Pricelist
2023

steel

Handmade in Italy since 1922

steel

In 1922 a young blacksmith, Angelo Po, opens his artisan shop. He is very young, but has a great passion for his job and confidence in his abilities,
The production of his stoves, useful for cooking, but also for heating and drying laundry, soon becomes successful and Angelo Po begins their mass production, then specializing in professional kitchens for catering.

In 1999 Steel is born,
from the entrepreneurial idea of the Po brothers and sisters, who separate from the family company with the aim of creating something new: a household product with professional performances.

In 2022, 100 years after this tradition began, Steel employs the fourth generation of the family, is distributed in 50 countries all over the world, and produces premnium appliances that combine high performances, technology and design.

Index

GENESI
Intro ____ 4
Genesi Range Cookers ____ 7
Genesi Cook Unit ____ 14
Genesi Cook Top ____ 15
Genesi Hobs ____ 16
Genesi Ovens ____ 17
Genesi Columns ____ 21
Genesi Hoods ____ 22
Genesi WorkTables ____ 23
Genesi Sinks ____ 24
Genesi Dishwasher ____ 25
Genesi Wall Units ____ 26
Genesi Refrigerators ____ 27

ASCOT
Intro ____ 29
Ascot Range Cookers ____ 31
Ascot Cook Unit ____ 38
Ascot Cook Top ____ 39
Ascot Ovens ____ 40
Ascot Columns ____ 43
Ascot Hoods ____ 44
Ascot Working Tables ____ 45
Ascot Sinks ____ 46
Ascot Dishwasher ____ 47
Ascot Wall Units ____ 48
Ascot Refrigerators ____ 49

ENFASI
Intro ____ 50
Enfasi Range Cookers ____ 52
Enfasi Design40 Hobs ____ 55
Enfasi Design40 Ovens ____ 56
Enfasi Design40 Hoods ____ 58
Enfasi Refrigerator ____ 59
Enfasi All Black Range Cookers ____ 60
Enfasi Design40 All Black Hobs ____ 63
Enfasi Design40 All Black Ovens ____ 64
Enfasi Design40 All Black Hoods ____ 66
Enfasi All Black Refrigerator ____ 67
Enfasi Mistral ____ 68

OXFORD
Intro ____ 72
Oxford Range Cookers ____ 73
Oxford Hoods ____ 76

ACCESSORIES ____ 77

DIMENSIONS ____ 85

GENESI

looking at the future

NEW AESTHETICS

Discover more about Genesi's new aesthetics at the link https://youtu.be/7AcMdAMHeNs

Ergonomics is key:
the control panel has a 10° inclined angle to be clearly visible withot the need to bend over.

Eternal and essential design:
the handles are thinner, with a totally renewed design, but without abandoning tradition.

From the professional tradition:
big metal casting knobs, for a perfect grip, now enriched with matt-black painted metal detail.

Cooking with no effort:
the induction top, as well as the cast iron grids of the gas top, is at the same level as your kitchen's worktop. Pots and pans can be moved from one zone to another without the need to lift them.

Monolithic:
the plinth contributes to the monolithic appearance of the cooker. It has been moved in line with the sides, so as to simplify the aesthetic levels.

NEW HOOD

From the professional tradition:
professional yet discreet design; the hood's front and filters are inclined just like the cooker; professional labyrinth filters; 900m3/h power

NEW PROGRAMMER

Everything at your fingertips:
the new TFT coloured programmer will allow to always have a global vision of everything that goes on in the oven.

37 preset recipes:
3 first courses, 11 meat main courses, 6 fish main courses, 9 desserts, 5 bread and pizza recipes, 3 side dishes.
Just select the recipe and the programmer will indicate the right function, temperature and cooking time.Impossible to go wrong.

15 FUNCTIONS

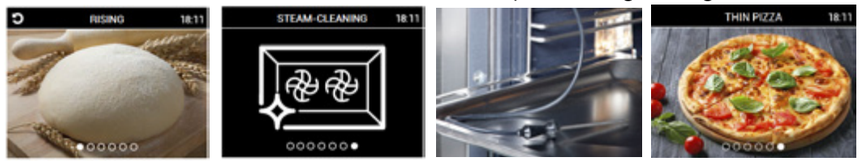

defrosting, static, upper resistance, static steam, lower resistance, grill, grill with rotisserie, ventilated steam, ventilated, convection, rapid pre-heating.
Rising: a special function that brings the oven cavity to 28°C, the perfect temperature for leavening bread products.
Steam-cleaning: a special function for the oven's cleaning, using the most natural and eco-friendly method; steam.
Meat probe: a special probe will allow to cook while controlling the core temperature of the food, thus being able to measure their degree of cooking.
Pizza: a special function deditcated to the most italian of the recipes, pizza!. It reaches 320°C to cook the perfect pizza in 3/4 minutes.

ECO

ECO cooking:
cooking without wasting energy while respecting the environment

SHABBAT

Shabbat:
your oven will be able to cook for 24 hours continuously, with the lights off and minimum consumption.

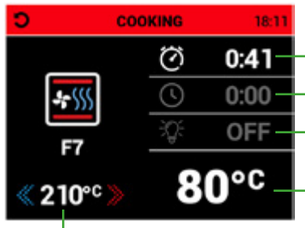

Cooking duration programming
Delayed start programming
Lights on/off option
Precise indication of the oven's temperature
Target temperature indicator. Variable at any time.

COMBI-STEAM

We are so convinced of our combi-steam system, as to be certain you won't be able to do without it. The new Genesi line always comes with a combi-steam main oven, in its new version with enameled interior and micro-drawn stainless steel base. As standard equipment you will have a couple of side stainless steel panels, removable and dishwasher safe.

REINFORCED SHELVES

New reinforced 6mm-diameter professional shelves

SOFT CLOSE

Soft-closing oven door, silent and safe thanks to the new shock absorbers.

INNVENT®
DOUBLE INVERTED VENTILATION SYSTEM

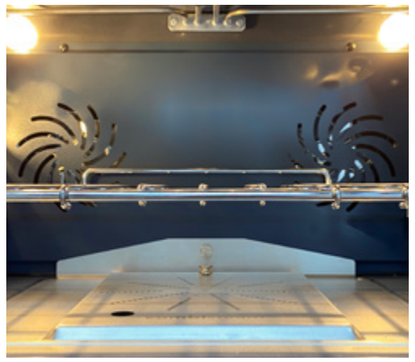

Our patended INNVENT system with double inverted rotation of the fans distributes heat evenly throughout the oven's cavity, not only vertically on different levels, but also horizontally on each level, allowing impeccable and homogeneous cooking. Your oven door can remain closed all the cooking time, because you won't have the need to rotate the tray halfway.

(available for 120cm e 90 cm range cookers and 90cm built-in ovens)

NEW LIGHTING

The new oven lighting system adds another great light point on the side of the oven at half height. This way, the content of each tray will be perfectly visible without needing to open the oven door, even when cooking on different levels.

MULTIFUNCTION COOK TOP

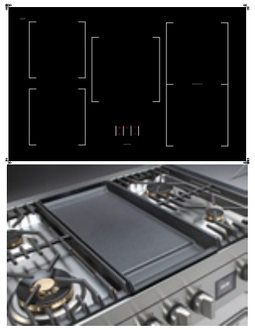

Full-gas, induction, gas+electrical elements. Cooktops for every need. The 5-zone induction, two of which flex, allows to use any kind of cooking support (pans, pots, grilltops or plates). The brass gas burners are 60% more efficient than the aluminium ones on the market, the dual-fuel mega-wok will let you decide the amount of power. Grill, frytop, teppanyaki are heated by two separated electrical zones allowing to use half or all of their surface.

GENESI **120**

STANDARD EQUIPMENT
- 2 reinforced shelves for main oven
- 1 wire shelf for side oven
- Rotisserie
- 1 stainless steel deep tray (main oven)
- 1 enameled deep tray (main oven)
- 1 enameled deep tray (side oven)
- 2 deep tray trivets (1 for main oven, 1 for side oven)
- Telescopic liners (2 couples)
- Easy-cleaning stainless steel liners (main oven)
- Wok support
- Water brick to fill in the water tank
- Temperature control with meat probe

for extra accessories see page 77
PRODUCT DIMENSIONS at page 85

MAIN OVEN

FUNCTIONS

ELECTRIC COMBI STEAM 91 lt
TEMP. 50°C - 315°C

SIDE OVEN

FUNCTIONS

ELECTRIC TRADITIONAL 39 lt
TEMP. 50°C - 265°C

TYPE NUMBER	GQ12SF-6M	GQ12SF-6T	GQ12SF-6B	GQ12SF-4TM	GQ12SF-4BM
HOB CONFIGURATION					
DESCRIPTION	7 BRASS GAS BURNERS 1 x 1 kW - 2 x 1,8 kW - 1 x 3 kW - 2 x 3,6 kW - 1 x 6 kW	6 BRASS GAS BURNERS 2 x 1 kW - 2 x 1,8 kW - 1 x 3 kW - 2 x 3,6 kW 1 ELECTRIC FRYTOP dual zone 2,4 kW	6 BRASS GAS BURNERS 2 x 1 kW - 2 x 1,8 kW - 1 x 3 kW - 2 x 3,6 kW 1 ELECTRIC BARBECUE dual zone 2,4 kW	5 BRASS GAS BURNERS 1 x 1 kW - 1 x 1,8 kW - 1 x 3 kW - 1 x 3,6 kW - 1 x 6 kW 1 ELECTRIC FRYTOP dual zone 2,4 kW	5 BRASS GAS BURNERS 1 x 1 kW - 1 x 1,8 kW - 1 x 3 kW - 1 x 3,6 kW - 1 x 6 kW 1 ELECTRIC BARBECUE dual zone 2,4 kW
MAX CONSUMPTION	5,1 kW	7,5 kW	7,5 kW	7,5 kW	7,5 kW
PRICE	NOK 165.000	NOK 175.000	NOK 175.000	NOK 175.000	NOK 175.000

STANDARD COLOUR

s.steel SS

COLOURS ON DEMAND ODC-CU

nero BA, crema CR, bordeaux BR, antracite AN
sabbia SA, nuvola NA, celeste CE, ametista AA

GENESI **100**

STANDARD EQUIPMENT
- 2 reinforced shelves for main oven
- 1 wire shelf for side oven
- Rotisserie
- 1 stainless steel deep tray (main oven)
- 1 enameled deep tray (main oven)
- 1 enameled deep tray (side oven)
- 2 deep tray trivets (1 for main oven, 1 for side oven)
- Telescopic liners (2 couples)
- Easy-cleaning stainless steel liners (main oven)
- Wok support (gas burners version)
- Water brick to fill in the water tank
- Temperature control with meat probe

for extra accessories see page 77
PRODUCT DIMENSIONS at page 85

MAIN OVEN

FUNCTIONS

ELECTRIC COMBI STEAM 70 lt
TEMP. 50°C - 315°C

SIDE OVEN

FUNCTIONS

ELECTRIC TRADITIONAL 39 lt
TEMP. 50°C - 265°C

TYPE NUMBER	GQ10SF-6W	GQ10SF-4M	GQ10SF-4T	GQ10SF-4B	GQ10SF-5FI
HOB CONFIGURATION					
DESCRIPTION	6 BRASS GAS BURNERS 2 x 1 kW - 1 x 1,8 kW - 1 x 3 kW - 2 x 3,6 kW	5 BRASS GAS BURNERS 1 x 1 kW - 1 x 1,8 kW - 1 x 3 kW - 1 x 3,6 kW - 1 x 6 kW	4 BRASS GAS BURNERS 1 x 1 kW - 1 x 1,8 kW - 1 x 3 kW - 1 x 3,6 kW 1 ELECTRIC FRYTOP dual zone 2,4 kW	4 BRASS GAS BURNERS 1 x 1 kW - 1 x 1,8 kW - 1 x 3 kW - 1 x 3,6 kW 1 ELECTRIC BARBECUE dual zone 2,4 kW	5 INDUCTIONS 2 x 1,85 kW - 1 x 2,1 kW 2 flex zones x 2,1 kW
MAX CONSUMPTION	4,5 kW	4,5 kW	6,9 kW	6,9 kW	11,9 kW
PRICE	NOK 95.000	NOK 95.000	NOK 108.000	NOK 108.000	NOK 117.000

STANDARD COLOUR

s.steel SS

COLOURS ON DEMAND ODC-CU

nero BA, crema CR, bordeaux BR, antracite AN, sabbia SA, nuvola NA, celeste CE, ametista AA

GENESI **100/3**

STANDARD EQUIPMENT
- 2 reinforced shelves (main/upper oven)
- 1 wire shelf (side oven)
- Rotisserie
- 1 stainless steel deep tray (main/upper oven)
- 1 enameled deep tray (main/upper oven)
- 1 enameled deep tray (side oven)
- 2 deep tray trivets (1 for main/upper oven, 1 for side oven)
- Telescopic liners (2 couples)
- Easy-cleaning stainless steel liners (main oven)
- Wok support (gas burners version)
- Water brick to fill in the water tank
- Pizza stone base and slice (upper oven)

for extra accessories see page 77
PRODUCT DIMENSIONS at page 85

MAIN OVEN

FUNCTIONS

ELECTRIC COMBI-STEAM 70 lt
TEMP. 50°C - 315°C

SIDE OVEN

FUNCTIONS

ELECTRIC TRADITIONAL 39 lt
TEMP. 50°C - 265°C

UPPER OVEN

FUNCTIONS

ELECTRIC PIZZA/GRILL 34 lt
TEMP. 50°C - 315°C

TYPE NUMBER	GQ10SFF-6W	GQ10SFF-4M	GQ10SFF-4T	GQ10SFF-4B	GQ10SFF-5FI
HOB CONFIGURATION					
DESCRIPTION	6 BRASS GAS BURNERS 2 x 1 kW - 1 x 1,8 kW - 1 x 3 kW - 2 x 3,6 kW	5 BRASS GAS BURNERS 1 x 1 kW - 1 x 1,8 kW - 1 x 3 kW - 1 x 3,6 kW - 1 x 6 kW	4 BRASS GAS BURNERS 1 x 1 kW - 1 x 1,8 kW - 1 x 3 kW - 1 x 3,6 kW 1 ELECTRIC FRYTOP dual zone 2,4 kW	4 BRASS GAS BURNERS 1 x 1 kW - 1 x 1,8 kW - 1 x 3 kW - 1 x 3,6 kW 1 ELECTRIC BARBECUE dual zone 2,4 kW	5 INDUCTIONS 2 x 1,85 kW - 1 x 2,1 kW 2 flex zones x 2,1 kW
MAX CONSUMPTION	6,6 kW	6,6 kW	9 kW	9 kW	14 kW
PRICE	NOK 99.000	NOK 99.000	NOK 107.000	NOK 107.000	NOK 118.000

STANDARD COLOUR

s.steel SS

COLOURS ON DEMAND ODC-CU

nero BA, crema CR, bordeaux BR, antracite AN, sabbia SA, nuvola NA, celeste CE, ametista AA

GENESI **100/3** SOLID DOOR

STANDARD EQUIPMENT
- 2 reinforced shelves (main/upper oven)
- 1 wire shelf (side oven)
- Rotisserie
- 1 stainless steel deep tray (main/upper oven)
- 1 enameled deep tray (main/upper oven)
- 1 enameled deep tray (side oven)
- 2 deep tray trivets (1 for main/upper oven, 1 for side oven)
- Telescopic liners (2 couples)
- Easy-cleaning stainless steel liners (main oven)
- Wok support (gas burners version)
- Water brick to fill in the water tank
- Pizza stone base and slice (upper oven)

for extra accessories see page 77
PRODUCT DIMENSIONS at page 85

MAIN OVEN

FUNCTIONS

ELECTRIC COMBI STEAM 70 lt
TEMP. 50°C - 315°C

SIDE OVEN

FUNCTIONS

ELECTRIC TRADITIONAL 39 lt
TEMP. 50°C - 265°C

UPPER OVEN

FUNCTIONS

ELECTRIC PIZZA/GRILL 34 lt
TEMP. 50°C - 315°C

TYPE NUMBER	GQ10SFF-D-6W	GQ10SFF-D-4M	GQ10SFF-D-4T	GQ10SFF-D-4B	GQ10SFF-D-5FI
HOB CONFIGURATION					
DESCRIPTION	6 BRASS GAS BURNERS 2 x 1 kW - 1 x 1,8 kW - 1 x 3 kW - 2 x 3,6 kW	5 BRASS GAS BURNERS 1 x 1 kW - 1 x 1,8 kW - 1 x 3 kW - 1 x 3,6 kW - 1 x 6 kW	4 BRASS GAS BURNERS 1 x 1 kW - 1 x 1,8 kW - 1 x 3 kW - 1 x 3,6 kW 1 ELECTRIC FRYTOP dual zone 2,4 kW	4 BRASS GAS BURNERS 1 x 1 kW - 1 x 1,8 kW - 1 x 3 kW - 1 x 3,6 kW 1 ELECTRIC BARBECUE dual zone 2,4 kW	5 INDUCTIONS 2 x 1,85 kW - 1 x 2,1 kW 2 flex zones x 2,1 kW
MAX CONSUMPTION	6,6 kW	6,6 kW	9 kW	9 kW	14 kW
PRICE	NOK 99.000	NOK 99.000	NOK 107.000	NOK 107.000	NOK 118.000

STANDARD COLOUR

s.steel SS

COLOURS ON DEMAND ODC-CU

nero BA, crema CR, bordeaux BR, antracite AN, sabbia SA, nuvola NA, celeste CE, ametista AA

GENESI **90**

STANDARD EQUIPMENT
- 2 reinforced shelves
- Rotisserie
- 1 stainless steel deep tray
- 1 enameled deep tray
- 1 deep tray trivet
- Telescopic liners (2 couples)
- Easy-cleaning stainless steel liners
- Wok support (gas burners version)
- Water brick to fill in the water tank
- Temperature control with meat probe

for extra accessories see page 77
PRODUCT DIMENSIONS at page 85

MAIN OVEN

FUNCTIONS

ELECTRIC COMBI STEAM 91 lt
TEMP. 50°C - 315°C

TYPE NUMBER	GQ9S-6W	GQ9S-4M	GQ9S-4T	GQ9S-4B	GQ9S-5FI
HOB CONFIGURATION					
DESCRIPTION	6 BRASS GAS BURNERS 2 x 1 kW - 1 x 1,8 kW - 1 x 3 kW - 2 x 3,6 kW	5 BRASS GAS BURNERS 1 x 1 kW - 1 x 1,8 kW - 1 x 3 kW - 1 x 3,6 kW - 1 x 6 kW	4 BRASS GAS BURNERS 1 x 1 kW - 1 x 1,8 kW - 1 x 3 kW - 1 x 3,6 kW 1 ELECTRIC FRYTOP dual zone 2,4 kW	4 BRASS GAS BURNERS 1 x 1 kW - 1 x 1,8 kW - 1 x 3 kW - 1 x 3,6 kW 1 ELECTRIC BARBECUE dual zone 2,4 kW	5 INDUCTIONS 2 x 1,85 kW - 1 x 2,1 kW 2 flex zones x 2,1 kW
MAX CONSUMPTION	3,65 kW	3,65 kW	6,05 kW	6,05 kW	11,1 kW
PRICE	NOK 80.000	NOK 80.000	NOK 95.000	NOK 95.000	NOK 105.000

STANDARD COLOUR

s.steel SS

COLOURS ON DEMAND ODC-CU

nero BA, crema CR, bordeaux BR, antracite AN, sabbia SA, nuvola NA, celeste CE, ametista AA

GENESI **70**

STANDARD EQUIPMENT
- 2 reinforced shelves
- Rotisserie
- 1 stainless steel deep tray
- 1 enameled deep tray
- 1 deep tray trivet
- Telescopic liners (2 couples)
- Easy-cleaning stainless steel liners
- Wok support (gas burners version)
- Water brick to fill in the water tank
- Temperature control with meat probe

for extra accessories see page 77
PRODUCT DIMENSIONS at page 85

MAIN OVEN

FUNCTIONS

ELECTRIC COMBI STEAM 70 lt
TEMP. 50°C - 315°C

TYPE NUMBER	GQ7S-4	GQ7S-4I
HOB CONFIGURATION		
DESCRIPTION	4 BRASS GAS BURNERS 1 x 1 kW - 1 x 1,8 kW - 1 x 3 kW - 1 x 3,6 kW	4 INDUCTIONS 2 x 1,85 kW - 1 x 2,3 kW - 1 x 1,4 kW
MAX CONSUMPTION	3,1 kW	10,5 kW
PRICE	NOK 70.000	NOK 83.000

STANDARD COLOUR

s.steel SS

COLOURS ON DEMAND ODC-CU

nero BA, crema CR, bordeaux BR, antracite AN, sabbia SA, nuvola NA, celeste CE, ametista AA

GENESI **70/2**

STANDARD EQUIPMENT
- 2 reinforced shelves (main /upper oven)
- Rotisserie
- 1 stainless steel deep tray (main /upper oven)
- 1 enameled deep tray (main/upper oven)
- 1 deep tray trivet
- Telescopic liners (2 couples)
- Easy-cleaning stainless steel liners (main oven)
- Wok support (gas burners version)
- Water brick to fill in the water tank
- Pizza stone base and slice (upper oven)

for extra accessories see page 77
PRODUCT DIMENSIONS at page 85

MAIN OVEN

FUNCTIONS

UPPER OVEN

FUNCTIONS

ELECTRIC COMBI STEAM 70 lt
TEMP. 50°C - 315°C

ELECTRIC PIZZA/GRILL 34 lt
TEMP. 50°C - 315°C

TYPE NUMBER	GQ7SF-4	GQ7SF-4I
HOB CONFIGURATION		
DESCRIPTION	4 BRASS GAS BURNERS 1 x 1 kW - 1 x 1,8 kW - 1 x 3 kW - 1 x 3,6 kW	4 INDUCTIONS 2 x 1,85 kW - 1 x 2,3 kW - 1 x 1,4 kW
MAX CONSUMPTION	5,15 kW	12,55 kW
PRICE	NOK 77.000	NOK 89.000

STANDARD COLOUR

s.steel SS

COLOURS ON DEMAND ODC-CU

nero BA, crema CR, bordeaux BR, antracite AN, sabbia SA, nuvola NA, celeste CE, ametista AA

GENESI **90**
COOK UNIT

STANDARD EQUIPMENT
- Wok support (gas burners version)

for extra accessories see page 77
PRODUCT DIMENSIONS at page 85

TYPE NUMBER	GQ9C-6W	GQ9C-5FI
HOB CONFIGURATION		
DESCRIPTION	6 BRASS GAS BURNERS 2 x 1 kW - 1 x 1,8 kW - 1 x 3 kW - 2 x 3,6 kW	5 INDUCTIONS 2 x 1,85 kW - 1 x 2,1 kW 2 flex zones x 2,1 kW
MAX CONSUMPTION	0,1 kW	7,4 kW
PRICE	NOK 50.000	NOK 75.000

STANDARD COLOUR

s.steel SS

COLOURS ON DEMAND ODC-CO

nero BA, crema CR, bordeaux BR, antracite AN
sabbia SA, nuvola NA, celeste CE, ametista AA

GENESI
COOKTOPS

STANDARD EQUIPMENT
- Wok support (gas burners version)

for extra accessories see page 77
PRODUCT DIMENSIONS at page 85

TYPE NUMBER	GQ9-6W	GQ9-4B	GQ9-4T	GQ9-5FI
HOB CONFIGURATION				
DESCRIPTION	6 BRASS GAS BURNERS 2 x 1 kW - 1 x 1,8 kW - 1 x 3 kW - 2 x 3,6 kW	4 BRASS GAS BURNERS 1 x 1 kW - 1 x 1,8 kW - 1 x 3 kW - 1 x 3,5 kW 1 ELECTRIC BARBECUE dual zone 2,4 kW	4 BRASS GAS BURNERS 1 x 1 kW - 1 x 1,8 kW - 1 x 3 kW - 1 x 3,6 kW 1 ELECTRIC FRYTOP dual zone 2,4 kW	5 INDUCTIONS 2 x 1,85 kW - 1 x 2,1 kW 2 flex zones x 2,1 kW
MAX CONSUMPTION	0,1 kW	2,4 kW	2,4 kW	7,4 kW
PRICE	NOK 30.000	NOK 43.000	NOK 43.000	NOK 49.000

STANDARD COLOUR

s.steel SS

GENESI
HOBS

STANDARD EQUIPMENT
- Grid reduction

for extra accessories see page 77
PRODUCT DIMENSIONS at page 85

TYPE NUMBER	GP7B-5	GP9B-5
HOB CONFIGURATION		
DESCRIPTION	5 BRASS GAS BURNERS 1 x 1 kW - 2 x 1,8 kW - 1 x 3 kW - 1 x 3,8 kW	5 BRASS GAS BURNERS 1 x 1 kW - 2 x 1,8 kW - 1 x 3 kW - 1 x 3,8 kW
MAX CONSUMPTION	0,1 kW	0,1 kW
PRICE	NOK 17.000	NOK 18.000

STANDARD COLOUR

s.steel SS

GENESI **60X60**

STANDARD EQUIPMENT
- 2 reinforced shelves
- 1 stainless steel deep tray
- 1 enameled deep tray
- Rotisserie
- Telescopic liners (2 couples)
- Trivet griddle
- Easy-cleaning stainless steel liners
- Water brick to fill in the water tank
- Temperature control with meat probe

for extra accessories see page 77
PRODUCT DIMENSIONS at page 85

MAIN OVEN

FUNCTIONS

ELECTRIC COMBI STEAM 70 lt
TEMP. 50°C - 315°C

TYPE NUMBER	GQFE6-S
MAX CONSUMPTION	3,05 kW
PRICE	NOK 37.000

STANDARD COLOUR

s.steel SS

COLOURS ON DEMAND ODC-FO

nero BA, crema CR, bordeaux BR, antracite AN
sabbia SA, nuvola NA, celeste CE, ametista AA

GENESI **60X90**

STANDARD EQUIPMENT
- 2 reinforced shelves (main/upper oven)
- 1 stainless steel deep tray (main/upper oven)
- 1 enameled deep tray (main/upper oven)
- Rotisserie
- Telescopic liners (2 couples)
- Trivet griddle
- Water brick to fill in the water tank
- Temperature control with meat probe
- Pizza stone base and slice (upper oven)

for extra accessories see page 77
PRODUCT DIMENSIONS at page 85

MAIN OVEN

FUNCTIONS

ELECTRIC COMBI STEAM 70 lt
TEMP. 50°C - 315°C

UPPER OVEN

FUNCTIONS

ELECTRIC PIZZA/GRILL 34 lt
TEMP. 50°C - 315°C

TYPE NUMBER	GQFFE6-S
MAX CONSUMPTION	5,15 kW
PRICE	NOK 59.000

STANDARD COLOUR

s.steel SS

COLOURS ON DEMAND ODC-FO

nero BA, crema CR, bordeaux BR, antracite AN
sabbia SA, nuvola NA, celeste CE, ametista AA

STANDARD TRIM

GENESI **90X60**

STANDARD EQUIPMENT
- 2 reinforced shelves
- 1 stainless steel deep tray
- 1 enameled deep tray
- Rotisserie
- Telescopic liners (2 couples)
- Trivet griddle
- Easy-cleaning stainless steel liners
- Water brick to fill in the water tank
- Temperature control with meat probe

for extra accessories see page 77
PRODUCT DIMENSIONS at page 85

MAIN OVEN

FUNCTIONS

ELECTRIC COMBI STEAM 91 lt
TEMP. 50°C - 315°C

TYPE NUMBER	GQFE9-S
MAX CONSUMPTION	3,65 kW
PRICE	NOK 57.000

STANDARD COLOUR

s.steel SS

COLOURS ON DEMAND ODC-FO

nero BA, crema CR, bordeaux BR, antracite AN
sabbia SA, nuvola NA, celeste CE, ametista AA

GENESI **60X45**

STANDARD EQUIPMENT
- 1 wire shelf
- 1 enameled deep tray
- Trivet griddle
- Pizza stone base and slice

for extra accessories see page 77
PRODUCT DIMENSIONS at page 85

MAIN OVEN

FUNCTIONS

ELECTRIC PIZZA/GRILL 34 lt
TEMP. 50°C - 315°C

TYPE NUMBER	GQFE6-P
MAX CONSUMPTION	2,1 kW
PRICE	NOK 35.000

STANDARD COLOUR

s.steel SS

COLOURS ON DEMAND ODC-FO

nero BA, crema CR, bordeaux BR, antracite AN
sabbia SA, nuvola NA, celeste CE, ametista AA

GENESI **MODULAR SYSTEM COLUMNS**

FEATURES
- stainless steel design column for built-in ovens
- professional look
- storage drawers and compartments

for extra accessories see page 77
PRODUCT DIMENSIONS at page 85

TYPE NUMBER	GQMS-7FP	GQMS-7FFP
CONFIGURATION		
DESCRIPTION	70 cm for 60x60 built-in oven 3 drawers (1 push-pull) 1 compartment (push-pull)	70 cm for 60x90 built-in oven 1 drawer 1 compartment (push-pull)
PRICE	NOK 45.000	NOK 45.000

STANDARD COLOUR

s.steel SS

GENESI **HOODS**

FEATURES
- stainless steel body material
- 4 speeds
- LED lighting
- soft-touch integrated control panel
- switch-off timer
- professional labyrinth filters

for extra accessories see page 77
PRODUCT DIMENSIONS at page 85

TYPE NUMBER	GQK120	GQK100	GQK90	GQK70
DESCRIPTION	1200mm width 550mm depth 700mm height 300mm height adjustment LED 4+2	1000mm width 550mm depth 700mm height 300mm height adjustment LED 3+2	900mm width 550mm depth 700mm height 300mm height adjustment LED 3+2	700mm width 550mm depth 700mm height 300mm height adjustment LED 3+2
YEARLY CONSUMPTION	113 kWh	113 kWh	97 kWh	97 kWh
NOISE LEVEL	64 dB	64 dB	64 dB	64 dB
SUCTION POWER	900 m^3	900 m^3	900 m^3	900 m^3
PRICE	NOK 42.000	NOK 36.000	NOK 34.000	NOK 29.000

STANDARD COLOUR

s.steel SS

COLOURS ON DEMAND GQKI 70/90/100/120

nero BA, crema CR, bordeaux BR, antracite AN
sabbia SA, nuvola NA, celeste CE, ametista AA

GENESI **MODULAR SYSTEM WORK TABLES**

FEATURES
- stainless steel body material
- push-pull drawer
- soft-closing system

for extra accessories see page 77
PRODUCT DIMENSIONS at page 85

TYPE NUMBER	GQ12C-P	GQ9C-P	GQ7C-P	GQ7S-P	GQ4C-P
CONFIGURATION					
DESCRIPTION	120 cm 3 drawers (1 push-pull)	90 cm 3 drawers (1 push-pull)	70 cm 3 drawers (1 push-pull)	70 cm 1 drawer (push-pull) 1 door	45 cm 3 drawers (1 push-pull)
PRICE	NOK 59.000	NOK 49.000	NOK 44.000	NOK 44.000	NOK 32.000

STANDARD COLOUR

s.steel SS

COLOURS ON DEMAND ODC-CO

nero BA, crema CR, bordeaux BR, antracite AN
sabbia SA, nuvola NA, celeste CE, ametista AA

GENESI **MODULAR SYSTEM SINKS**

FEATURES
- stainless steel sink unit
- storage compartments

for extra accessories see page 77
PRODUCT DIMENSIONS at page 85

TYPE NUMBER	GQ12C-L2	GQ9S-L2	GQ9S-L1G	GQ7S-L2
CONFIGURATION				
DESCRIPTION	120 cm 2 bowls 2 drawers soft-closing	90 cm 2 bowls 2 doors soft-closing	90 cm 1 bowl 2 doors soft-closing	70 cm 2 bowls 1 door soft-closing
PRICE	NOK 59.000	NOK 52.000	NOK 52.000	NOK 48.000

STANDARD COLOUR

s.steel SS

COLOURS ON DEMAND ODC-CO

nero BA, crema CR, bordeaux BR, antracite AN
sabbia SA, nuvola NA, celeste CE, ametista AA

GENESI **MODULAR SYSTEM DISHWASHER**

FEATURES
- 9 programs: Jet wash 14', Quick 30' 40°C, Eco, Super 50' 60°C, Dual Pro Wash 60°C, Hygiene 70°C, Smart 30-50°C, Smart 50-60°C, Smart 60-70°C
- smart wash
- 15 PS capacity
- info LED
- interior LED lights
- touch control
- delay timer option (up to 19 hours)
- silent wash
- rinse-aid refill and salt refill indicator
- end of cicle indicator
- half load option
- extra dry option
- energy save option
- self-clean option
- side by side sliding design for cutlery basket
- adjustable mug shelves
- wine glass holder
- adjustable upper basket position
- foldable wire
- tray holder
- removable cutlery basket
- energy efficiency class D (A+++)

for extra accessories see page 77
PRODUCT DIMENSIONS at page 85

TYPE NUMBER	GQLS-7	GQLSB-6	GQLSFB-6
CONFIGURATION			
DESCRIPTION	70 cm stainless steel working table built-in dishwasher stainless steel door	60 cm built-in dishwasher stainless steel door	60 cm built-in dishwasher
PRICE	NOK 59.000	NOK 29.900	NOK 20.000

STANDARD COLOUR

s.steel SS

COLOURS ON DEMAND ODC-CO

nero BA, crema CR, bordeaux BR, antracite AN
sabbia SA, nuvola NA, celeste CE, ametista AA

GENESI **MODULAR SYSTEM WALL UNITS**

FEATURES
- stainless steel wall units
- soft-closing doors

for extra accessories see page 77
PRODUCT DIMENSIONS at page 85

TYPE NUMBER	GQP9S-S	GQP9S	GQP7S
CONFIGURATION			
DESCRIPTION	90 cm 1 shelf + 1 draining board 2 doors	90 cm 2 shelves 2 doors	70 cm 2 shelves 1 door
PRICE	NOK 31.000	NOK 29.900	NOK 22.000

STANDARD COLOUR

s.steel SS

COLOURS ON DEMAND ODC-CO

nero BA, crema CR, bordeaux BR, antracite AN
sabbia SA, nuvola NA, celeste CE, ametista AA

GENESI **90 FRENCH DOOR**

FEATURES
- Total capacity 596 L
- Fridge capacity 419 L
- Freezer capacity 177 L
- Durable inverter technology
- Plumbed water dispenser
- Metal glide drawers
- LED touch display
- Ice maker (in the freezer)
- Surround LED lighting
- Electronic temperature control
- Open door alarm
- Total No-Frost
- Super-cool and super-freeze system
- Holiday mode
- Energy class F

for extra accessories see page 77
PRODUCT DIMENSIONS at page 85

TYPE NUMBER	GQFRB-9F	GQFR-9F
DESCRIPTION	built-in painted plastic sides	free-standing stainless steel sides
PRICE	NOK 65.000	NOK 69.000

STANDARD COLOUR

s.steel SS

COLOURS ON DEMAND ODC-FR

nero BA, crema CR, bordeaux BR, antracite AN
sabbia SA, nuvola NA, celeste CE, ametista AA

GENESI 70
WINE CELLAR

FEATURES
- Total capacity 92 L
- Stainless steel working cabinet 70cm
- Double-glass door
- Adjustable temperature +2°C-+10°C
- Adjustable shelves
- Internal LED lighting
- Energy class G

for extra accessories see page 77
PRODUCT DIMENSIONS at page 85

TYPE NUMBER	**G7FR-O**
PRICE	NOK 72.000

STANDARD COLOUR

s.steel SS

ASCOT

tradition and innovation

NEW
PROGRAMMER

Everything at your fingertips:
the new TFT coloured programmer will allow to always have a global vision of everything that goes on in the oven.

37 preset recipes:
3 first courses, 11 meat main courses, 6 fish main courses, 9 desserts, 5 bread and pizza recipes, 3 side dishes.
Just select the recipe and the programmer will indicate the right function, temperature and cooking time.Impossible to go wrong.

15 FUNCTIONS

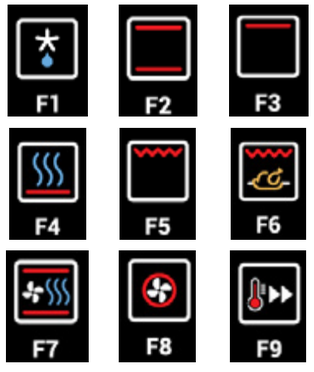

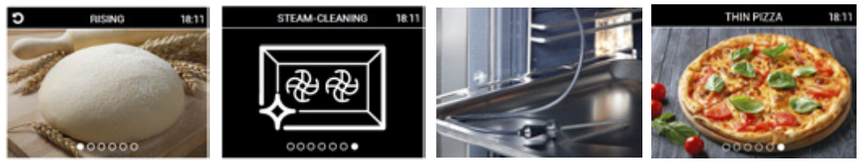

defrosting, static, upper resistance, static steam, lower resistance, grill, grill with rotisserie, ventilated steam, ventilated, convection, rapid pre-heating.
Rising: a special function that brings the oven cavity to 28°C, the perfect temperature for leavening bread products.
Steam-cleaning: a special function for the oven's cleaning, using the most natural and eco-friendly method; steam.
Meat probe: a special probe will allow to cook while controlling the core temperature of the food, thus being able to measure their degree of cooking.
Pizza: a special function deditcated to the most italian of the recipes, pizza!. It reaches 320°C to cook the perfect pizza in 3/4 minutes

ECO

ECO cooking:
cooking without wasting energy while respecting the environment

SHABBAT

Shabbat:
your oven will be able to cook for 24 hours continuously, with the lights off and minimum consumption.

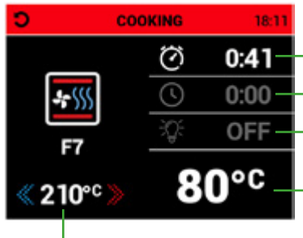

Cooking duration programming
Delayed start programming
Lights on/off option
Precise indication of the oven's temperature

Target temperature indicator.
Variable at any time.

COMBI-STEAM

We are so convinced of our combi-steam system, as to be certain you won't be able to do without it. The Ascot line always comes with a combi-steam main oven, in its new version with enameled interior and micro-drawn stainless steel base. As standard equipment you will have a couple of side stainless steel panels, removable and dishwasher safe.

REINFORCED SHELVES

New reinforced 6mm-diameter professional shelves

SOFT CLOSE

Soft-closing oven door, silent and safe thanks to the new shock absorbers.

INNVENT®
DOUBLE INVERTED VENTILATION SYSTEM

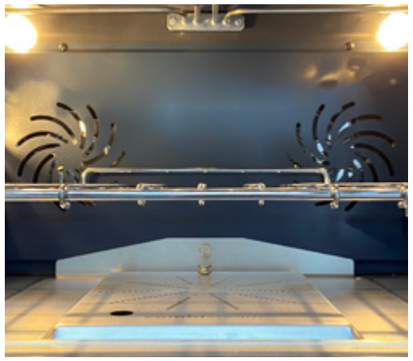

Our patended INNVENT system with double inverted rotation of the fans distributes heat evenly throughout the oven's cavity, not only vertically on different levels, but also horizontally on each level, allowing impeccable and homogeneous cooking. Your oven door can remain closed all the cooking time, because you won't have the need to rotate the tray halfway.

(available for 120cm e 90 cm range cookers and 90cm built-in ovens)

NEW LIGHTING

The new oven lighting system adds another great light point on the side of the oven at half height. This way, the content of each tray will be perfectly visible without needing to open the oven door, even when cooking on different levels.

MULTIFUNCTION COOK TOP

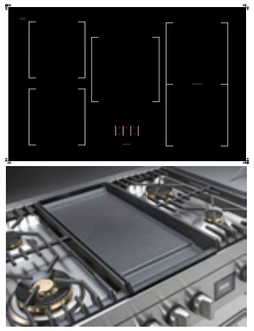

Full-gas, induction, gas+electrical elements. Cooktops for every need. The 5-zone induction, two of which flex, allows to use any kind of cooking support (pans, pots, grilltops or plates). The brass gas burners are 60% more efficient than the aluminium ones on the market, the dual-fuel mega-wok will let you decide the amount of power. Grill, frytop, teppanyaki are heated by two separated electrical zones allowing to use half or all of their surface.

ASCOT **120**

STANDARD EQUIPMENT
- 2 reinforced shelves for main oven
- 1 wire shelf for side oven
- Rotisserie
- 1 stainless steel deep tray (main oven)
- 1 enameled deep tray (main oven)
- 1 enameled deep tray (side oven)
- 2 deep tray trivets (1 for main oven, 1 for side oven)
- Telescopic liners (2 couples)
- Easy-cleaning stainless steel liners (main oven)
- Wok support
- Water brick to fill in the water tank
- Temperature control with meat probe

for extra accessories see page 77
PRODUCT DIMENSIONS at page 85

MAIN OVEN

FUNCTIONS

ELECTRIC COMBI STEAM 91 lt
TEMP. 50°C - 315°C

SIDE OVEN

FUNCTIONS

ELECTRIC TRADITIONAL 39 lt
TEMP. 50°C - 265°C

TYPE NUMBER	AQ12SF-6M	AQ12SF-6T	AQ12SF-6B	AQ12SF-4TM	AQ12SF-4BM
HOB CONFIGURATION		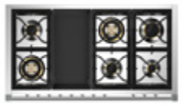	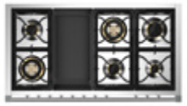		
DESCRIPTION	7 BRASS GAS BURNERS 1 x 1 kW - 2 x 1,8 kW - 1 x 3 kW - 2 x 3,6 kW - 1 x 6 kW	6 BRASS GAS BURNERS 2 x 1 kW - 2 x 1,8 kW - 1 x 3 kW - 2 x 3,6 kW 1 ELECTRIC FRYTOP dual zone 2,4 kW	6 BRASS GAS BURNERS 2 x 1 kW - 2 x 1,8 kW - 1 x 3 kW - 2 x 3,6 kW 1 ELECTRIC BARBECUE dual zone 2,4 kW	5 BRASS GAS BURNERS 1 x 1 kW - 1 x 1,8 kW - 1 x 3 kW - 1 x 3,6 kW - 1 x 6 kW 1 ELECTRIC FRYTOP dual zone 2,4 kW	5 BRASS GAS BURNERS 1 x 1 kW - 1 x 1,8 kW - 1 x 3 kW - 1 x 3,6 kW - 1 x 6 kW 1 ELECTRIC BARBECUE dual zone 2,4 kW
MAX CONSUMPTION	5,1 kW	7,5 kW	7,5 kW	7,5 kW	7,5 kW
PRICE	NOK 165.000	NOK 175.000	NOK 175.000	NOK 175.000	NOK 175.000

STANDARD COLOUR

s.steel SS

COLOURS ON DEMAND ODC-CU

nero BA, crema CR, bordeaux BR, antracite AN, sabbia SA, nuvola NA, celeste CE, ametista AA

STANDARD TRIM

cromo C

TRIMS ON DEMAND AF

ottone O

bronzo B

nikel N

ASCOT **100**

STANDARD EQUIPMENT
- 2 reinforced shelves for main oven
- 1 wire shelf for side oven
- Rotisserie
- 1 stainless steel deep tray (main oven)
- 1 enameled deep tray (main oven)
- 1 enameled deep tray (side oven)
- 2 deep tray trivets (1 for main oven, 1 for side oven)
- Telescopic liners (2 couples)
- Easy-cleaning stainless steel liners (main oven)
- Wok support (gas burners version)
- Water brick to fill in the water tank
- Temperature control with meat probe

for extra accessories see page 77
PRODUCT DIMENSIONS at page 85

MAIN OVEN

FUNCTIONS

ELECTRIC COMBI STEAM 70 lt
TEMP. 50°C - 315°C

SIDE OVEN

FUNCTIONS

ELECTRIC TRADITIONAL 39 lt
TEMP. 50°C - 265°C

TYPE NUMBER	AQ10SF-6W	AQ10SF-4M	AQ10SF-4T	AQ10SF-4B	AQ10SF-5FI
HOB CONFIGURATION					
DESCRIPTION	6 BRASS GAS BURNERS 2 x 1 kW - 1 x 1,8 kW - 1 x 3 kW - 2 x 3,6 kW	5 BRASS GAS BURNERS 1 x 1 kW - 1 x 1,8 kW - 1 x 3 kW - 1 x 3,6 kW - 1 x 6 kW	4 BRASS GAS BURNERS 1 x 1 kW - 1 x 1,8 kW - 1 x 3 kW - 1 x 3,6 kW 1 ELECTRIC FRYTOP dual zone 2,4 kW	4 BRASS GAS BURNERS 1 x 1 kW - 1 x 1,8 kW - 1 x 3 kW - 1 x 3,6 kW 1 ELECTRIC BARBECUE dual zone 2,4 kW	5 INDUCTIONS 2 x 1,85 kW - 1 x 2,1 kW 2 flex zones x 2,1 kW
MAX CONSUMPTION	4,5 kW	4,5 kW	6,9 kW	6,9 kW	11,9 kW
PRICE	NOK 95.000	NOK 95.000	NOK 108.000	NOK 108.000	NOK 117.000

STANDARD COLOUR

s.steel SS

COLOURS ON DEMAND ODC-CU

nero BA, crema CR, bordeaux BR, antracite AN
sabbia SA, nuvola NA, celeste CE, ametista AA

STANDARD TRIM

cromo C

TRIMS ON DEMAND AF

ottone O, bronzo B, nikel N

ASCOT **100/3**

STANDARD EQUIPMENT
- 2 reinforced shelves (main/upper oven)
- 1 wire shelf (side oven)
- Rotisserie
- 1 stainless steel deep tray (main/upper oven)
- 1 enameled deep tray (main/upper oven)
- 1 enameled deep tray (side oven)
- 2 deep tray trivets (1 for main/upper oven, 1 for side oven)
- Telescopic liners (2 couples)
- Easy-cleaning stainless steel liners (main oven)
- Wok support (gas burners version)
- Water brick to fill in the water tank
- Pizza stone base and slice (upper oven)

for extra accessories see page 77
PRODUCT DIMENSIONS at page 85

MAIN OVEN

FUNCTIONS

ELECTRIC COMBI STEAM 70 lt
TEMP. 50°C - 315°C

SIDE OVEN

FUNCTIONS

ELECTRIC TRADITIONAL 39 lt
TEMP. 50°C - 265°C

UPPER OVEN

FUNCTIONS

ELECTRIC PIZZA/GRILL 34 lt
TEMP. 50°C - 315°C

TYPE NUMBER	AQ10SFF-6W	AQ10SFF-4M	AQ10SFF-4T	AQ10SFF-4B	AQ10SFF-5FI
HOB CONFIGURATION					
DESCRIPTION	6 BRASS GAS BURNERS 2 x 1 kW - 1 x 1,8 kW - 1 x 3 kW - 2 x 3,6 kW	5 BRASS GAS BURNERS 1 x 1 kW - 1 x 1,8 kW - 1 x 3 kW - 1 x 3,6 kW - 1 x 6 kW	4 BRASS GAS BURNERS 1 x 1 kW - 1 x 1,8 kW - 1 x 3 kW - 1 x 3,6 kW 1 ELECTRIC FRYTOP dual zone 2,4 kW	4 BRASS GAS BURNERS 1 x 1 kW - 1 x 1,8 kW - 1 x 3 kW - 1 x 3,6 kW 1 ELECTRIC BARBECUE dual zone 2,4 kW	5 INDUCTIONS 2 x 1,85 kW - 1 x 2,1 kW 2 flex zones x 2,1 kW
MAX CONSUMPTION	6,6 kW	6,6 kW	9 kW	9 kW	14 kW
PRICE	NOK 99.000	NOK 99.000	NOK 107.000	NOK 107.000	NOK 118.000

STANDARD COLOUR

s.steel SS

COLOURS ON DEMAND ODC-CU

nero BA, crema CR, bordeaux BR, antracite AN
sabbia SA, nuvola NA, celeste CE, ametista AA

STANDARD TRIM

cromo C

TRIMS ON DEMAND AF

ottone O, bronzo B, nikel N

ASCOT **100/3** SOLID DOOR

STANDARD EQUIPMENT
- 2 reinforced shelves (main/upper oven)
- 1 wire shelf (side oven)
- Rotisserie
- 1 stainless steel deep tray (main/upper oven)
- 1 enameled deep tray (main/upper oven)
- 1 enameled deep tray (side oven)
- 2 deep tray trivets (1 for main/upper oven, 1 for side oven)
- Telescopic liners (2 couples)
- Easy-cleaning stainless steel liners (main oven)
- Wok support (gas burners version)
- Water brick to fill in the water tank
- Pizza stone base and slice (upper oven)

for extra accessories see page 77
PRODUCT DIMENSIONS at page 85

MAIN OVEN

FUNCTIONS

ELECTRIC COMBI STEAM 70 lt
TEMP. 50°C - 315°C

SIDE OVEN

FUNCTIONS

ELECTRIC TRADITIONAL 39 lt
TEMP. 50°C - 265°C

UPPER OVEN

FUNCTIONS

ELECTRIC PIZZA/GRILL 34 lt
TEMP. 50°C - 315°C

TYPE NUMBER	AQ10SFF-D-6W	AQ10SFF-D-4M	AQ10SFF-D-4T	AQ10SFF-D-4B	AQ10SFF-D-5FI
HOB CONFIGURATION					
DESCRIPTION	6 BRASS GAS BURNERS 2 x 1 kW - 1 x 1,8 kW - 1 x 3 kW - 2 x 3,6 kW	5 BRASS GAS BURNERS 1 x 1 kW - 1 x 1,8 kW - 1 x 3 kW - 1 x 3,6 kW - 1 x 6 kW	4 BRASS GAS BURNERS 1 x 1 kW - 1 x 1,8 kW - 1 x 3 kW - 1 x 3,6 kW 1 ELECTRIC FRYTOP dual zone 2,4 kW	4 BRASS GAS BURNERS 1 x 1 kW - 1 x 1,8 kW - 1 x 3 kW - 1 x 3,6 kW 1 ELECTRIC BARBECUE dual zone 2,4 kW	5 INDUCTIONS 2 x 1,85 kW - 1 x 2,1 kW 2 flex zones x 2,1 kW
MAX CONSUMPTION	6,6 kW	6,6 kW	9 kW	9 kW	14 kW
PRICE	NOK 99.000	NOK 99.000	NOK 107.000	NOK 107.000	NOK 118.000

STANDARD COLOUR

s.steel SS

COLOURS ON DEMAND ODC-CU

nero BA, crema CR, bordeaux BR, antracite AN, sabbia SA, nuvola NA, celeste CE, ametista AA

STANDARD TRIM

cromo C

TRIMS ON DEMAND AF

ottone O, bronzo B, nikel N

ASCOT **90**

STANDARD EQUIPMENT
- 2 reinforced shelves
- Rotisserie
- 1 stainless steel deep tray
- 1 enameled deep tray
- 1 deep tray trivet
- Telescopic liners (2 couples)
- Easy-cleaning stainless steel liners
- Wok support (gas burners version)
- Water brick to fill in the water tank
- Temperature control with meat probe

for extra accessories see page 77
PRODUCT DIMENSIONS at page 85

MAIN OVEN

FUNCTIONS

ELECTRIC COMBI STEAM 91 lt
TEMP. 50°C - 315°C

TYPE NUMBER	AQ9S-6W	AQ9S-4M	AQ9S-4T	AQ9S-4B	AQ9S-5FI
HOB CONFIGURATION					
DESCRIPTION	6 BRASS GAS BURNERS 2 x 1 kW - 1 x 1,8 kW - 1 x 3 kW - 2 x 3,6 kW	5 BRASS GAS BURNERS 1 x 1 kW - 1 x 1,8 kW - 1 x 3 kW - 1 x 3,6 kW - 1 x 6 kW	4 BRASS GAS BURNERS 1 x 1 kW - 1 x 1,8 kW - 1 x 3 kW - 1 x 3,6 kW 1 ELECTRIC FRYTOP dual zone 2,4 kW	4 BRASS GAS BURNERS 1 x 1 kW - 1 x 1,8 kW - 1 x 3 kW - 1 x 3,6 kW 1 ELECTRIC BARBECUE dual zone 2,4 kW	5 INDUCTIONS 2 x 1,85 kW - 1 x 2,1 kW 2 flex zones x 2,1 kW
MAX CONSUMPTION	3,65 kW	3,65 kW	6,05 kW	6,05 kW	11,1 kW
PRICE	NOK 80.000	NOK 80.000	NOK 95.000	NOK 95.000	NOK 105.000

STANDARD COLOUR

s.steel SS

COLOURS ON DEMAND ODC-CU

nero BA, crema CR, bordeaux BR, antracite AN, sabbia SA, nuvola NA, celeste CE, ametista AA

STANDARD TRIM

cromo C

TRIMS ON DEMAND AF

ottone O, bronzo B, nikel N

ASCOT **70**

STANDARD EQUIPMENT
- 2 reinforced shelves
- Rotisserie
- 1 stainless steel deep tray
- 1 enameled deep tray
- 1 deep tray trivet
- Telescopic liners (2 couples)
- Easy-cleaning stainless steel liners
- Wok support (gas burners version)
- Water brick to fill in the water tank
- Temperature control with meat probe

for extra accessories see page 77
PRODUCT DIMENSIONS at page 85

MAIN OVEN

FUNCTIONS

ELECTRIC COMBI STEAM 70 lt
TEMP. 50°C - 315°C

TYPE NUMBER	AQ7S-4	AQ7S-4I
HOB CONFIGURATION		
DESCRIPTION	4 BRASS GAS BURNERS 1 x 1 kW - 1 x 1,8 kW - 1 x 3 kW - 1 x 3,6 kW	4 INDUCTIONS 2 x 1,85 kW - 1 x 2,3 kW - 1 x 1,4 kW
MAX CONSUMPTION	3,1 kW	10,5 kW
PRICE	NOK 70.000	NOK 83.000

STANDARD COLOUR

s.steel SS

COLOURS ON DEMAND ODC-CU

nero BA, crema CR, bordeaux BR, antracite AN
sabbia SA, nuvola NA, celeste CE, ametista AA

STANDARD TRIM

cromo C

TRIMS ON DEMAND AF

ottone O, bronzo B, nikel N

ASCOT **70/2**

STANDARD EQUIPMENT
- 2 reinforced shelves
- Rotisserie
- 1 stainless steel deep tray (main/upper oven)
- 1 enameled deep tray (main/upper oven)
- 1 deep tray trivet
- Telescopic liners (2 couples)
- Easy-cleaning stainless steel liners (main oven)
- Wok support (gas burners version)
- Water brick to fill in the water tank
- Pizza stone base and slice (upper oven)

for extra accessories see page 77
PRODUCT DIMENSIONS at page 85

MAIN OVEN

FUNCTIONS

ELECTRIC COMBI STEAM 70 lt
TEMP. 50°C - 315°C

UPPER OVEN

FUNCTIONS

ELECTRIC PIZZA/GRILL 34 lt
TEMP. 50°C - 315°C

TYPE NUMBER	AQ7SF-4	AQ7SF-4I
HOB CONFIGURATION		
DESCRIPTION	4 BRASS GAS BURNERS 1 x 1 kW - 1 x 1,8 kW - 1 x 3 kW - 1 x 3,6 kW	4 INDUCTIONS 2 x 1,85 kW - 1 x 2,3 kW - 1 x 1,4 kW
MAX CONSUMPTION	5,15 kW	12,55 kW
PRICE	NOK 77.000	NOK 89.000

STANDARD COLOUR

s.steel SS

COLOURS ON DEMAND ODC-CU

nero BA, crema CR, bordeaux BR, antracite AN
sabbia SA, nuvola NA, celeste CE, ametista AA

STANDARD TRIM

cromo C

TRIMS ON DEMAND AF

ottone O, bronzo B, nikel N

ASCOT **90**
COOK UNIT

STANDARD EQUIPMENT
- Wok support (gas burners version)

for extra accessories see page 77
PRODUCT DIMENSIONS at page 85

TYPE NUMBER	A9C-6W	A9C-5FI
HOB CONFIGURATION		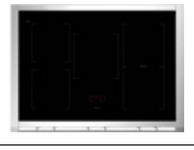
DESCRIPTION	6 BRASS GAS BURNERS 2 x 1 kW - 1 x 1,8 kW - 1 x 3 kW - 2 x 3,6 kW	5 INDUCTIONS 2 x 1,85 kW - 1 x 2,1 kW 2 flex zones x 2,1 kW
MAX CONSUMPTION	0,1 kW	7,4 kW
PRICE	NOK 50.000	NOK 75.000

STANDARD COLOUR

s.steel SS

COLOURS ON DEMAND ODC-CO

nero BA, crema CR, bordeaux BR, antracite AN
sabbia SA, nuvola NA, celeste CE, ametista AA

STANDARD TRIM

cromo C

TRIMS ON DEMAND AF

ottone O, bronzo B, nikel N

ASCOT
COOKTOPS

STANDARD EQUIPMENT
- Wok support (gas burners version)

for extra accessories see page 77
PRODUCT DIMENSIONS at page 85

TYPE NUMBER	A9-6W	A9-4B	A9-4T	A9-5FI
HOB CONFIGURATION				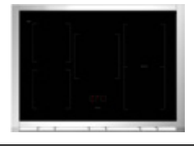
DESCRIPTION	6 BRASS GAS BURNERS 2 x 1 kW - 1 x 1,8 kW - 1 x 3 kW - 2 x 3,6 kW	4 BRASS GAS BURNERS 1 x 1 kW - 1 x 1,8 kW - 1 x 3 kW - 1 x 3,5 kW 1 ELECTRIC BARBECUE dual zone 2,4 kW	4 BRASS GAS BURNERS 1 x 1 kW - 1 x 1,8 kW - 1 x 3 kW - 1 x 3,6 kW 1 ELECTRIC FRYTOP dual zone 2,4 kW	5 INDUCTIONS 2 x 1,85 kW - 1 x 2,1 kW 2 flex zones x 2,1 kW
MAX CONSUMPTION	0,1 kW	2,4 kW	2,4 kW	7,4 kW
PRICE	NOK 30.000	NOK 43.000	NOK 43.000	NOK 49.000

STANDARD COLOUR

s.steel SS

COLOURS ON DEMAND ODC-CO

nero BA, crema CR, bordeaux BR, antracite AN
sabbia SA, nuvola NA, celeste CE, ametista AA

STANDARD TRIM

cromo C

TRIMS ON DEMAND AF

ottone O, bronzo B, nikel N

ASCOT **60X60**

STANDARD EQUIPMENT
- 2 reinforced shelves
- 1 stainless steel deep tray
- 1 enameled deep tray
- Rotisserie
- Telescopic liners (2 couples)
- Trivet griddle
- Easy-cleaning stainless steel liners
- Water brick to fill in the water tank
- Temperature control with meat probe

for extra accessories see page 77
PRODUCT DIMENSIONS at page 85

MAIN OVEN

FUNCTIONS

ELECTRIC COMBI STEAM 70 lt
TEMP. 50°C - 315°C

TYPE NUMBER	AQFE6-S
MAX CONSUMPTION	3,05 kW
PRICE	NOK 37.000

STANDARD COLOUR

s.steel SS

COLOURS ON DEMAND ODC-FO

nero BA, crema CR, bordeaux BR, antracite AN, sabbia SA, nuvola NA, celeste CE, ametista AA

STANDARD TRIM

cromo C

TRIMS ON DEMAND AF

ottone O, bronzo B, nikel N

ASCOT **60X90**

STANDARD EQUIPMENT
- 2 reinforced shelves (main/upper)
- 1 stainless steel deep tray (main/upper)
- 1 enameled deep tray (main/upper)
- Rotisserie
- Telescopic liners (2 couples)
- Trivet griddle
- Water brick to fill in the water tank
- Temperature control with meat probe
- Pizza stone base and slice (upper oven)

for extra accessories see page 77
PRODUCT DIMENSIONS at page 85

MAIN OVEN

FUNCTIONS

ELECTRIC COMBI STEAM 70 lt
TEMP. 50°C - 315°C

UPPER OVEN

FUNCTIONS

ELECTRIC PIZZA/GRILL 34 lt
TEMP. 50°C - 315°C

TYPE NUMBER	AQFFE6-S
MAX CONSUMPTION	5,15 kW
PRICE	NOK 59.000

STANDARD COLOUR

s.steel SS

COLOURS ON DEMAND ODC-FO

nero BA, crema CR, bordeaux BR, antracite AN, sabbia SA, nuvola NA, celeste CE, ametista AA

STANDARD TRIM

cromo C

TRIMS ON DEMAND AF

ottone O, bronzo B, nikel N

ASCOT **90X60**

STANDARD EQUIPMENT
- 2 reinforced shelves
- 1 stainless steel deep tray
- 1 enameled deep tray
- Rotisserie
- Telescopic liners (2 couples)
- Trivet griddle
- Easy-cleaning stainless steel liners
- Water brick to fill in the water tank
- Temperature control with meat probe

for extra accessories see page 77
PRODUCT DIMENSIONS at page 85

MAIN OVEN

FUNCTIONS

ELECTRIC COMBI STEAM 91 lt
TEMP. 50°C - 315°C

TYPE NUMBER	AQFE9-S
MAX CONSUMPTION	3,65 kW
PRICE	NOK 57.000

STANDARD COLOUR

s.steel SS

STANDARD TRIM

cromo C

COLOURS ON DEMAND ODC-FO

nero BA, crema CR, bordeaux BR, antracite AN
sabbia SA, nuvola NA, celeste CE, ametista AA

TRIMS ON DEMAND AF

ottone O, bronzo B, nikel N

ASCOT **MODULAR SYSTEM COLUMNS**

FEATURES
- stainless steel design column for built-in ovens
- professional look
- storage drawers and compartments

for extra accessories see page 77
PRODUCT DIMENSIONS at page 85

TYPE NUMBER	AMS-7FP	AMS-7FFP
CONFIGURATION		
DESCRIPTION	70 cm for 60x60 built-in oven 3 drawers (1 push-pull) 1 compartment (push-pull)	70 cm for 60x90 built-in oven 1 drawer 1 compartment (push-pull)
PRICE	NOK 45.000	NOK 45.000

STANDARD COLOUR

s.steel SS

STANDARD TRIM

cromo C

TRIMS ON DEMAND AF

ottone O, bronzo B, nikel N

ASCOT **HOODS**

FEATURES
- stainless steel body material
- 4 speeds
- LED lighting
- soft-touch integrated control panel
- switch-off timer
- new professional labyrinth filters

for extra accessories see page 77
PRODUCT DIMENSIONS at page 85

TYPE NUMBER	AKL120	AKL100	AKL90	AKL70
DESCRIPTION	1172mm width 500mm depth 554mm height 446mm height adjustment LED 4 + 2	1000mm width 500mm depth 554mm height 446mm height adjustment LED 3 + 2	900mm width 500mm depth 554mm height 446mm height adjustment LED 3 + 2	700mm width 500mm depth 554mm height 446mm height adjustment LED 3 + 2
YEARLY CONSUMPTION	66 kWh	66 kWh	66 kWh	66 kWh
NOISE LEVEL	64 dB	64 dB	64 dB	64 dB
SUCTION POWER	900 m^3	900 m^3	900 m^3	900 m^3
PRICE	NOK 42.000	NOK 36.000	NOK 34.000	NOK 29.000

STANDARD COLOUR

s.steel SS

COLOURS ON DEMAND ODC-CA

nero BA, crema CR, bordeaux BR, antracite AN
sabbia SA, nuvola NA, celeste CE, ametista AA

STANDARD TRIM

cromo C

TRIMS ON DEMAND AF

ottone O

bronzo B

nikel N

ASCOT **MODULAR SYSTEM WORK TABLES**

FEATURES
- stainless steel body material
- large storage compartments
- soft-closing system

for extra accessories see page 77
PRODUCT DIMENSIONS at page 85

TYPE NUMBER	A12S-P	A9C-P	A7C-P	A7S-P	A4C-P
CONFIGURATION					
DESCRIPTION	120 cm 2 drawers 2 doors soft-closing	90 cm 3 drawers (1 push-pull) soft-closing	70 cm 3 drawers (1 push-pull) soft-closing	70 cm 1 drawer (push-pull) 1 door soft-closing	70 cm 3 drawers (1 push-pull) soft-closing
PRICE	NOK 59.000	NOK 49.000	NOK 44.000	NOK 44.000	NOK 32.000

STANDARD COLOUR

s.steel SS

COLOURS ON DEMAND ODC-CO

nero BA, crema CR, bordeaux BR, antracite AN
sabbia SA, nuvola NA, celeste CE, ametista AA

STANDARD TRIM

cromo C

TRIMS ON DEMAND AF

ottone O

bronzo B

nikel N

ASCOT MODULAR SYSTEM SINKS

FEATURES
- stainless steel sink unit
- storage compartments

for extra accessories see page 77
PRODUCT DIMENSIONS at page 85

TYPE NUMBER	A12S-L2	A9S-L2	A9S-L1G	A7S-L2
CONFIGURATION				
DESCRIPTION	120 cm 2 bowls 2 doors soft-closing	90 cm 2 bowls 2 doors soft-closing	90 cm 1 bowl 2 doors soft-closing	70 cm 2 bowls 1 door soft-closing
PRICE	NOK 59.000	NOK 52.000	NOK 52.000	NOK 48.000

STANDARD COLOUR

s.steel SS

COLOURS ON DEMAND ODC-CO

nero BA, crema CR, bordeaux BR, antracite AN, sabbia SA, nuvola NA, celeste CE, ametista AA

STANDARD TRIM

cromo C

TRIMS ON DEMAND AF

ottone O, bronzo B, nikel N

ASCOT MODULAR SYSTEM DISHWASHER

FEATURES
- 9 programs: Jet wash 14', Quick 30' 40°C, Eco, Super 50' 60°C, Dual Pro Wash 60°C, Hygiene 70°C, Smart 30-50°C, Smart 50-60°C, Smart 60-70°C
- smart wash
- 15 PS capacity
- info LED
- interior LED lights
- touch control
- delay timer option (up to 19 hours)
- silent wash
- rinse-aid refill and salt refill indicator
- end of cicle indicator
- half load option
- extra dry option
- energy save option
- self-clean option
- side by side sliding design for cutlery basket
- adjustable mug shelves
- wine glass holder
- adjustable upper basket position
- foldable wire
- tray holder
- removable cutlery basket
- energy efficiency class D (A+++)

for extra accessories see page 77
PRODUCT DIMENSIONS at page 85

TYPE NUMBER	AQLS-7	AQLSB-6
CONFIGURATION		
DESCRIPTION	70 cm stainless steel working table built-in dishwasher stainless steel door	60 cm built-in dishwasher stainless steel door
PRICE	NOK 59.000	NOK 29.900

STANDARD COLOUR

s.steel SS

COLOURS ON DEMAND ODC-CO

nero BA, crema CR, bordeaux BR, antracite AN, sabbia SA, nuvola NA, celeste CE, ametista AA

STANDARD TRIM

cromo C

TRIMS ON DEMAND AF

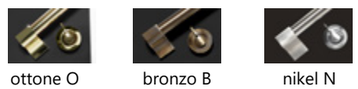

ottone O, bronzo B, nikel N

ASCOT **MODULAR SYSTEM WALL UNITS**

FEATURES
- stainless steel wall units
- soft-closing doors

for extra accessories see page 77
PRODUCT DIMENSIONS at page 85

TYPE NUMBER	AP9S-S	AP9S	AP7S
CONFIGURATION			
DESCRIPTION	90 cm 1 shelf + 1 draining board 2 doors	90 cm 2 shelves 2 doors	70 cm 2 shelves 1 door
PRICE	NOK 31.000	NOK 29.900	NOK 22.000

STANDARD COLOUR

s.steel SS

COLOURS ON DEMAND ODC-CO

nero BA, crema CR, bordeaux BR, antracite AN, sabbia SA, nuvola NA, celeste CE, ametista AA

STANDARD TRIM

cromo C

TRIMS ON DEMAND AF

ottone O, bronzo B, nikel N

ASCOT **90 FRENCH DOOR**

FEATURES
- Total capacity 596 L
- Fridge capacity 419 L
- Freezer capacity 177 L
- Durable inverter technology
- Plumbed water dispenser
- Metal glide drawers
- LED touch display
- Ice maker (in the freezer)
- Surround LED lighting
- Electronic temperature control
- Open door alarm
- Total No-Frost
- Super-cool and super-freeze system
- Holiday mode
- Energy class F

for extra accessories see page 77
PRODUCT DIMENSIONS at page 85

TYPE NUMBER	AQFRB-9F	AQFR-9F
DESCRIPTION	built-in painted plastic sides	free-standing stainless steel sides
PRICE	NOK 65.000	NOK 69.000

STANDARD COLOUR

s.steel SS

COLOURS ON DEMAND ODC-FR

nero BA, crema CR, bordeaux BR, antracite AN, sabbia SA, nuvola NA, celeste CE, ametista AA

STANDARD TRIM

cromo C

TRIMS ON DEMAND AF

ottone O, bronzo B, nikel N

ENFASI

essential design

NEW PROGRAMMER

Everything at your fingertips:
the new TFT coloured programmer will allow to always have a global vision of everything that goes on in the oven.

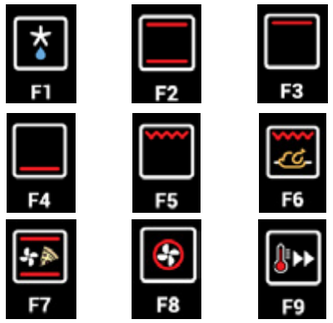

9 functions:
defrosting, static, upper resistance, lower resistance, grill, grill with rotisserie, pizza, convection, rapid pre-heating

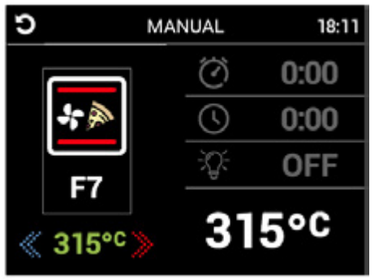

Like at the restaurant:
the special pizza function allows the oven to reach 315°C, to cook the perfect pizza in a few minutes, on different levels too.

Meat probe:
a special probe will allow to cook while controlling the core temperature of the food, thus being able to measure their degree of cooking.

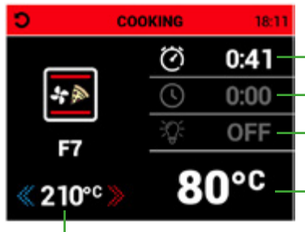

Cooking duration programming

Delayed start programming

Lights on/off option

Precise indication of the oven's temperature

Target temperature indicator.
Variable at any time.

INNVENT®

DOUBLE INVERTED VENTILATION SYSTEM

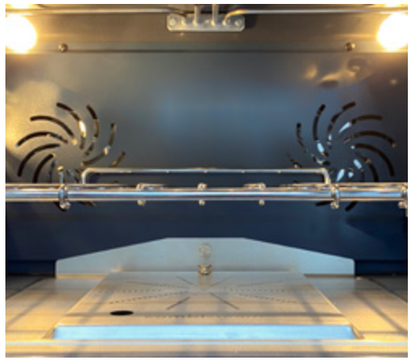

Our patended INNVENT system with double inverted rotation of the fans distributes heat evenly throughout the oven's cavity, not only vertically on different levels, but also horizontally on each level, allowing impeccable and homogeneous cooking. Your oven door can remain closed all the cooking time, because you won't have the need to rotate the tray halfway.

(available 90 cm range cookers)

NEW LIGHTING

The new oven lighting system adds another great light point on the side of the oven at half height. This way, the content of each tray will be perfectly visible without needing to open the oven door, even when cooking on different levels.

GAS OR INDUCTION

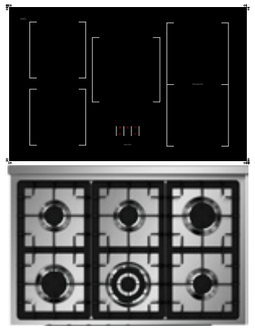

Perfect for every need, the cooktop can be full gas or full induction with 5 induction zones, two of which flexible.

PERFECT ANYWHERE

Designed to live in harmony with the kitchen furniture. Its cooktop is 40mm high like most kitchen tops; its 200mm feet can be mounted in the rear position to allow the kitchen plinth to be mounted at the front.

ENFASI **100**

STANDARD EQUIPMENT
- Wire shelves (1 for main oven, 1 for side oven)
- Rotisserie
- Enameled deep tray (1 for main oven, 1 for side oven)
- Wok support (gas burners version)
- Temperature control with meat probe

for extra accessories see page 77
PRODUCT DIMENSIONS at page 85

MAIN OVEN

FUNCTIONS

ELECTRIC MULTIFUNCTION 70 lt
TEMP. 50°C - 315°C

SIDE OVEN

FUNCTIONS

ELECTRIC TRADITIONAL 39 lt
TEMP. 50°C - 265°C

TYPE NUMBER	EQ10FF-6	EQ10FF-5FI
HOB CONFIGURATION		
DESCRIPTION	6 GAS BURNERS 1 x 1 kW - 2 x 1,8 kW - 2 x 3 kW - 1 x 3,6 kW	5 INDUCTIONS 2 x 1,85 kW - 1 x 2,1 kW 2 flex zones x 2,1 kW
MAX CONSUMPTION	4,5 kW	11,9 kW
PRICE	NOK 72.000	NOK 93.000

STANDARD COLOUR

s.steel SS

COLOURS ON DEMAND ODC-CE

antracite AN

ENFASI **100/3**

STANDARD EQUIPMENT
- Wire shelves (1 for main oven, 1 for side oven)
- Rotisserie
- Enameled deep tray (1 for main oven, 1 for side oven)
- Wok support (gas burners version)
- Pizza stone base and slice (upper oven)

for extra accessories see page 77
PRODUCT DIMENSIONS at page 85

MAIN OVEN

FUNCTIONS

ELECTRIC MULTIFUNCTION 70 lt
TEMP. 50°C - 265°C

SIDE OVEN

FUNCTIONS

ELECTRIC TRADITIONAL 39 lt
TEMP. 50°C - 265°C

UPPER OVEN

FUNCTIONS

ELECTRIC PIZZA/GRILL 34 lt
TEMP. 50°C - 315°C

TYPE NUMBER	EQ10FFF-6	EQ10FFF-5FI
HOB CONFIGURATION		
DESCRIPTION	6 GAS BURNERS 1 x 1 kW - 2 x 1,8 kW - 2 x 3 kW - 1 x 3,6 kW	5 INDUCTIONS 2 x 1,85 kW - 1 x 2,1 kW 2 flex zones x 2,1 kW
MAX CONSUMPTION	6,6 kW	14 kW
PRICE	NOK 79.000	NOK 99.000

STANDARD COLOUR

s.steel SS

COLOURS ON DEMAND ODC-CE

antracite AN

ENFASI **90**

STANDARD EQUIPMENT
- Wire shelf
- Rotisserie
- Enameled deep tray
- Wok support (gas burners version)
- Temperature control with meat probe

for extra accessories see page 77
PRODUCT DIMENSIONS at page 85

MAIN OVEN

FUNCTIONS

ELECTRIC MULTIFUNCTION 91 lt
TEMP. 50°C - 315°C

TYPE NUMBER	EQ9F-6	EQ9F-5FI
HOB CONFIGURATION		
DESCRIPTION	6 GAS BURNERS 1 x 1 kW - 2 x 1,8 kW - 2 x 3 kW - 1 x 3,6 kW	5 INDUCTIONS 2 x 1,85 kW - 1 x 2,1 kW 2 flex zones x 2,1 kW
MAX CONSUMPTION	3,65 kW	11,1 kW
PRICE	NOK 52.000	NOK 78.000

STANDARD COLOUR

s.steel SS

COLOURS ON DEMAND ODC-CE

antracite AN

ENFASI **HOBS DESIGN40**

FEATURES
- Controls placed on the front
- 40mm thickness
- 900mm width
- 600mm depth
- metal knobs

for extra accessories see page 77
PRODUCT DIMENSIONS at page 85

TYPE NUMBER	E9P-6	E9P-5FI
HOB CONFIGURATION		
DESCRIPTION	6 GAS BURNERS 1 x 1 kW - 2 x 1,8 kW - 2 x 3 kW - 1 x 3,6 kW	5 INDUCTIONS 2 x 1,85 kW - 1 x 2,1 kW - 2 flex zones x 2,1 kW
MAX CONSUMPTION	0,1 kW	7,4 kW
PRICE	NOK 28.000	NOK 49.000

STANDARD COLOUR

s.steel SS

ENFASI **60X60 DESIGN40**

STANDARD EQUIPMENT
- Wire shelf
- Enameled deep tray
- Rotisserie
- Temperature control with meat probe

for extra accessories see page 77
PRODUCT DIMENSIONS at page 85

MAIN OVEN

FUNCTIONS

ELECTRIC MULTIFUNCTION 70 lt
TEMP. 50°C - 315°C

TYPE NUMBER	EQFE6
MAX CONSUMPTION	3,05 kW
PRICE	NOK 26.500

STANDARD COLOUR

s.steel SS

ENFASI **60X90 DESIGN40**

STANDARD EQUIPMENT
- Wire shelf
- Enameled deep tray
- Rotisserie
- Temperature control with meat probe
- Pizza stone base and slice (upper oven)

for extra accessories see page 77
PRODUCT DIMENSIONS at page 85

MAIN OVEN

FUNCTIONS

ELECTRIC MULTIFUNCTION 70 lt
TEMP. 50°C - 315°C

UPPER OVEN

FUNCTIONS

ELECTRIC PIZZA/GRILL 34 lt
TEMP. 50°C - 315°C

TYPE NUMBER	EQFFE6
MAX CONSUMPTION	5,15 kW
PRICE	NOK 49.000

STANDARD COLOUR

s.steel SS

ENFASI **HOODS DESIGN40**

FEATURES
- 40mm high body
- stainless steel
- 4 speeds
- LED lighting

for extra accessories see page 77
PRODUCT DIMENSIONS at page 85

TYPE NUMBER	EKL100	EKL90
DESCRIPTION	999mm width 480mm depth 800mm height 650mm height adjustment LED 4	899mm width 480mm depth 800mm height 650mm height adjustment LED 4
YEARLY CONSUMPTION	64 kWh	64 kWh
NOISE LEVEL	59 dB	59 dB
SUCTION POWER	850 m^3	850 m^3
PRICE	NOK 29.000	NOK 25.500

STANDARD COLOUR

s.steel SS

ENFASI **90 FRENCH-DOOR**

FEATURES
- Total capacity 596 L
- Fridge capacity 419 L
- Freezer capacity 177 L
- Durable inverter technology
- Plumbed water dispenser
- Metal glide drawers
- LED touch display
- Ice maker (in the freezer)
- Surround LED lighting
- Electronic temperature control
- Open door alarm
- Total No-Frost
- Super-cool and super-freeze system
- Holiday mode
- Energy class F

for extra accessories see page 77
PRODUCT DIMENSIONS at page 85

TYPE NUMBER	EQFRB-9F	EQFR-9F
DESCRIPTION	built-in painted plastic sides	free-standing stainless steel sides
PRICE	NOK 61.000	NOK 66.000

STANDARD COLOUR

s.steel SS

ENFASI **100**
ALL BLACK

STANDARD EQUIPMENT
- Wire shelves (1 for main oven, 1 for side oven)
- Rotisserie
- Enameled deep tray (1 for main oven, 1 for side oven)
- Wok support (gas burners version)
- Temperature control with meat probe

for extra accessories see page 77
PRODUCT DIMENSIONS at page 85

MAIN OVEN

FUNCTIONS

ELECTRIC MULTIFUNCTION 70 lt
TEMP. 50°C - 315°C

SIDE OVEN

FUNCTIONS

ELECTRIC TRADITIONAL 39 lt
TEMP. 50°C - 265°C

TYPE NUMBER	**EQ10FF-6 NF**	**EQ10FF-5FI NF**
HOB CONFIGURATION		
DESCRIPTION	6 GAS BURNERS 1 x 1 kW - 2 x 1,8 kW - 2 x 3 kW - 1 x 3,6 kW	5 INDUCTIONS 2 x 1,85 kW - 1 x 2,1 kW 2 flex zones x 2,1 kW
MAX CONSUMPTION	4,5 kW	11,9 kW
PRICE	NOK 73.000	NOK 95.000

STANDARD COLOUR

nero fumo NF

ENFASI **100/3** SOLID DOOR
ALL BLACK

STANDARD EQUIPMENT
- Wire shelves (1 for main oven, 1 for side oven)
- Rotisserie
- Enameled deep tray (1 for main oven, 1 for side oven)
- Wok support (gas burners version)
- Pizza stone base and slice (upper oven)

for extra accessories see page 77
PRODUCT DIMENSIONS at page 85

MAIN OVEN

FUNCTIONS

ELECTRIC MULTIFUNCTION 70 lt
TEMP. 50°C - 265°C

SIDE OVEN

FUNCTIONS

ELECTRIC TRADITIONAL 39 lt
TEMP. 50°C - 265°C

UPPER OVEN

FUNCTIONS

ELECTRIC PIZZA/GRILL 34 lt
TEMP. 50°C - 315°C

TYPE NUMBER	**EQ10FFF-6 NF**	**EQ10FFF-5FI NF**
HOB CONFIGURATION		
DESCRIPTION	6 GAS BURNERS 1 x 1 kW - 2 x 1,8 kW - 2 x 3 kW - 1 x 3,6 kW	5 INDUCTIONS 2 x 1,85 kW - 1 x 2,1 kW 2 flex zones x 2,1 kW
MAX CONSUMPTION	6,6 kW	14 kW
PRICE	NOK 81.500	NOK 102.000

STANDARD COLOUR

nero fumo NF

ENFASI **90 ALL BLACK**

STANDARD EQUIPMENT
- Wire shelf
- Rotisserie
- Enameled deep tray
- Wok support (gas burners version)
- Temperature control with meat probe

for extra accessories see page 77
PRODUCT DIMENSIONS at page 85

MAIN OVEN

FUNCTIONS

ELECTRIC MULTIFUNCTION 91 lt
TEMP. 50°C - 315°C

TYPE NUMBER	EQ9F-6 NF	EQ9F-5FI NF
HOB CONFIGURATION		
DESCRIPTION	6 GAS BURNERS 1 x 1 kW - 2 x 1,8 kW - 2 x 3 kW - 1 x 3,6 kW	5 INDUCTIONS 2 x 1,85 kW - 1 x 2,1 kW 2 flex zones x 2,1 kW
MAX CONSUMPTION	3,65 kW	11,1 kW
PRICE	NOK 57.000	NOK 79.000

STANDARD COLOUR

nero fumo NF

ENFASI **HOBS DESIGN40 ALL BLACK**

FEATURES
- Controls placed on the front
- 40mm thickness
- 900mm width
- 600mm depth
- metal knobs

for extra accessories see page 77
PRODUCT DIMENSIONS at page 85

TYPE NUMBER	E9P-6 NF	E9P-5FI NF
HOB CONFIGURATION		
DESCRIPTION	6 GAS BURNERS 1 x 1 kW - 2 x 1,8 kW - 2 x 3 kW - 1 x 3,6 kW	5 INDUCTIONS 2 x 1,85 kW - 1 x 2,1 kW - 2 flex zones x 2,1 kW
MAX CONSUMPTION	0,1 kW	7,4 kW
PRICE	NOK 31.000	NOK 52.000

STANDARD COLOUR

nero fumo NF

ENFASI **60X60**
DESIGN40 ALL BLACK

STANDARD EQUIPMENT
- Wire shelf
- Enameled deep tray
- Rotisserie
- Temperature control with meat probe

for extra accessories see page 77
PRODUCT DIMENSIONS at page 85

MAIN OVEN

FUNCTIONS

ELECTRIC MULTIFUNCTION 70 lt
TEMP. 50°C - 315°C

TYPE NUMBER	EQFE6 NF
MAX CONSUMPTION	3,05 kW
PRICE	NOK 29.000

STANDARD COLOUR

nero fumo NF

ENFASI **60X90**
DESIGN40 ALL BLACK

STANDARD EQUIPMENT
- Wire shelf
- Enameled deep tray
- Rotisserie
- Temperature control with meat probe
- Pizza stone base and slice (upper oven)

for extra accessories see page 77
PRODUCT DIMENSIONS at page 85

MAIN OVEN

FUNCTIONS

ELECTRIC MULTIFUNCTION 70 lt
TEMP. 50°C - 315°C

UPPER OVEN

FUNCTIONS

ELECTRIC PIZZA/GRILL 34 lt
TEMP. 50°C - 315°C

TYPE NUMBER	EQFFE6 NF
MAX CONSUMPTION	5,15 kW
PRICE	NOK 52.000

STANDARD COLOUR

nero fumo NF

ENFASI **HOODS**
DESIGN40 ALL BLACK

FEATURES
- 40mm high body
- stainless steel
- 4 speeds
- LED lighting

for extra accessories see page 77
PRODUCT DIMENSIONS at page 85

TYPE NUMBER	EKL90 NF	EKL100 NF
DESCRIPTION	899mm width 480mm depth 800mm height 650mm height adjustment LED 3	999mm width 480mm depth 800mm height 650mm height adjustment LED 3
YEARLY CONSUMPTION	64 kWh	64 kWh
NOISE LEVEL	59 dB	59 dB
SUCTION POWER	850 m^3	850 m^3
PRICE	NOK 28.500	NOK 32.000

STANDARD COLOUR

nero fumo NF

ENFASI **90**
FRENCH-DOOR ALL BLACK

FEATURES
- Total capacity 596 L
- Fridge capacity 419 L
- Freezer capacity 177 L
- Durable inverter technology
- Plumbed water dispenser
- Metal glide drawers
- LED touch display
- Ice maker (in the freezer)
- Surround LED lighting
- Electronic temperature control
- Open door alarm
- Total No-Frost
- Super-cool and super-freeze system
- Holiday mode
- Energy class F

for extra accessories see page 77
PRODUCT DIMENSIONS at page 85

TYPE NUMBER	EQFRB-9F NF	EQFR-9F NF
DESCRIPTION	built-in painted plastic sides	free-standing stainless steel sides
PRICE	NOK 64.000	NOK 69.000

STANDARD COLOUR

s.steel SS

ENFASI MISTRAL

all in one

The first range cooker that combines an oven, a cook top and an advanced suction system in one product.

NEW PROGRAMMER

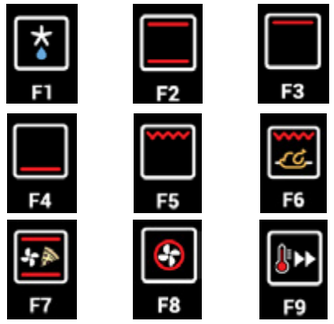

Everything at your fingertips:
the new TFT coloured programmer will allow to always have a global vision of everything that goes on in the oven.

9 functions:
defrosting, static, upper resistance, lower resistance, grill, grill with rotisserie, pizza, convection, rapid pre-heating

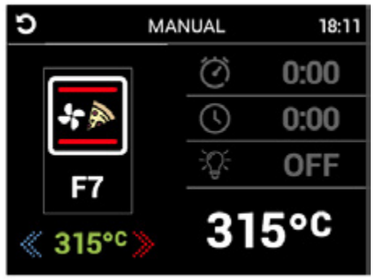

Like at the restaurant:
the special pizza function allows the oven to reach 315°C, to cook the perfect pizza in a few minutes, on different levels too.

Meat probe:
a special probe will allow to cook while controlling the core temperature of the food, thus being able to measure their degree of cooking.

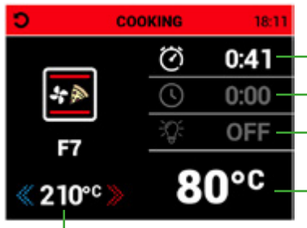

Cooking duration programming

Delayed start programming

Lights on/off option

Precise indication of the oven's temperature

Target temperature indicator.
Variable at any time.

INNVENT®

DOUBLE INVERTED VENTILATION SYSTEM

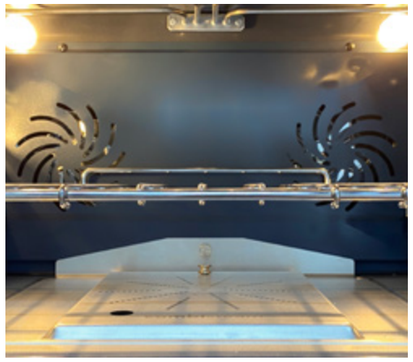

Our patended INNVENT system with double inverted rotation of the fans distributes heat evenly throughout the oven's cavity, not only vertically on different levels, but also horizontally on each level, allowing impeccable and homogeneous cooking. Your oven door can remain closed all the cooking time, because you won't have the need to rotate the tray halfway.

(available 90 cm range cookers)

NEW LIGHTING

The new oven lighting system adds another great light point on the side of the oven at half height. This way, the content of each tray will be perfectly visible without needing to open the oven door, even when cooking on different levels.

FLEX INDUCTION

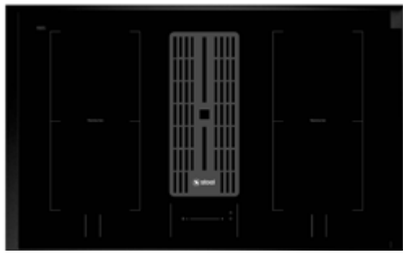

Precise and comfortable: 4 induction zones, and all of them are flexible. The controls are positioned on the front of the cooker, leaving larger and more comfortable space of use on the top.

INTEGRATED HOOD

The high-performance (700 m3/h) and low-noise (max. 63 dB) brushless engine, adjustable in 4 speeds with slide controls on the top and provided with an off-timer, instantly catches steams and odors.
The high-thickness enameled steel grid and the filters are easily removable for quick and optimal cleaning.

ENFASI **90**
MISTRAL

STANDARD EQUIPMENT
- Wire shelf
- Rotisserie
- Enameled deep tray
- Wok support (gas burners version)
- Temperature control with meat probe

for extra accessories see page 77
PRODUCT DIMENSIONS at page 85

MAIN OVEN

FUNCTIONS

ELECTRIC MULTIFUNCTION 91 lt
TEMP. 50°C - 315°C

TYPE NUMBER	EQ9F-4FIK
HOB CONFIGURATION	
DESCRIPTION	4 INDUCTION ZONES 4 flex zones x 2,1 kW
MAX CONSUMPTION	10,6 kW
PRICE	NOK 101.000

STANDARD COLOUR

s.steel SS

COLOURS ON DEMAND ODC-CE

antracite AN

ENFASI **90**
MISTRAL ALL BLACK

STANDARD EQUIPMENT
- Wire shelf
- Rotisserie
- Enameled deep tray
- Wok support (gas burners version)
- Temperature control with meat probe

for extra accessories see page 77
PRODUCT DIMENSIONS at page 85

MAIN OVEN

FUNCTIONS

ELECTRIC MULTIFUNCTION 91 lt
TEMP. 50°C - 315°C

TYPE NUMBER	EQ9F-4FIK NF
HOB CONFIGURATION	
DESCRIPTION	4 INDUCTION ZONES 4 flex zones x 2,1 kW
MAX CONSUMPTION	10,6 kW
PRICE	NOK 103.000

STANDARD COLOUR

nero fumo NF

OXFORD

harmony of details

MULTIFUNCTION OVEN

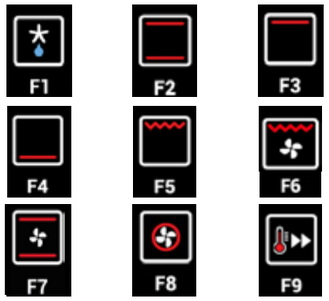

9 functions:
defrosting, static, upper resistance, lower resistance, grill, grill with rotisserie, pizza, convection, rapid pre-heating

INNVENT®

DOUBLE INVERTED VENTILATION SYSTEM

Our patended INNVENT system with double inverted rotation of the fans distributes heat evenly throughout the oven's cavity, not only vertically on different levels, but also horizontally on each level, allowing impeccable and homogeneous cooking. Your oven door can remain closed all the cooking time, because you won't have the need to rotate the tray halfway.

(available 90 cm range cookers)

NEW LIGHTING

The new oven lighting system adds another great light point on the side of the oven at half height. This way, the content of each tray will be perfectly visible without needing to open the oven door, even when cooking on different levels.

GAS OR INDUCTION

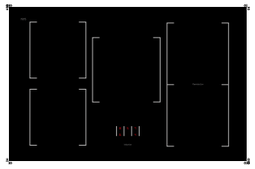

Perfect for every need, the cooktop can be full gas or full induction with 5 induction zones, two of which flexible.

UNIQUE DETAILS

Designed for those who look for a classic look that can also stand out for its unique design, made of harmonious details. The decorative hinges, the black backsplash, the black sides, control panel, plinth and cook top: all is aimed at creating an elegant case with professional performances, customizable with different colors.

OXFORD**100**

STANDARD EQUIPMENT
- Wire shelves (1 for main oven, 1 for side oven)
- Rotisserie
- Enameled deep tray (1 for main oven, 1 for side oven)
- Wok support (gas burners version)

for extra accessories see page 77
PRODUCT DIMENSIONS at page 85

MAIN OVEN

FUNCTIONS

ELECTRIC MULTIFUNCTION 70 lt
TEMP. 50°C - 265°C

SIDE OVEN

FUNCTIONS

ELECTRIC TRADITIONAL 39 lt
TEMP. 50°C - 265°C

TYPE NUMBER	**X10FF-6**	**X10FF-5FI**
HOB CONFIGURATION		
DESCRIPTION	6 GAS BURNERS 1 x 1 kW - 2 x 1,8 kW - 2 x 3 kW - 1 x 4,5 kW	5 INDUCTIONS 2 x 1,85 kW - 1 x 2,3 kW 2 flex zones x 2,1 kW
MAX CONSUMPTION	2,9 kW	10,3 kW
PRICE	NOK 75.000	NOK 97.000

STANDARD COLOUR

nero fumo NF

COLOURS ON DEMAND ODC-CE

nero BA
crema CR
bordeaux BR
ametista AA
sabbia SA
nuvola NA
celeste CE

OXFORD**100/3**

STANDARD EQUIPMENT
- Wire shelves (1 for main oven, 1 for side oven)
- Rotisserie
- Enameled deep tray (1 for main oven, 1 for side oven)
- Wok support (gas burners version)
- Pizza stone base and slice (upper oven)

for extra accessories see page 77
PRODUCT DIMENSIONS at page 85

MAIN OVEN

FUNCTIONS

ELECTRIC MULTIFUNCTION 70 lt
TEMP. 50°C - 265°C

SIDE OVEN

FUNCTIONS

ELECTRIC TRADITIONAL 39 lt
TEMP. 50°C - 265°C

UPPER OVEN

FUNCTIONS

ELECTRIC PIZZA/GRILL 34 lt
TEMP. 50°C - 315°C

TYPE NUMBER	XQ10FFF-6	XQ10FFF-5FI
HOB CONFIGURATION		
DESCRIPTION	6 GAS BURNERS 1 x 1 kW - 2 x 1,8 kW - 2 x 3 kW - 1 x 4,5 kW	5 INDUCTIONS 2 x 1,85 kW - 1 x 2,3 kW 2 flex zones x 2,1 kW
MAX CONSUMPTION	6,6 kW	14 kW
PRICE	NOK 81.500	NOK 104.000

STANDARD COLOUR

nero fumo NF

COLOURS ON DEMAND ODC-CE

nero BA, crema CR, bordeaux BR, ametista AA, sabbia SA, nuvola NA, celeste CE

OXFORD**90**

STANDARD EQUIPMENT
- Wire shelf
- Rotisserie
- Enameled deep tray
- Wok support (gas burners version)

for extra accessories see page 77
PRODUCT DIMENSIONS at page 85

MAIN OVEN

FUNCTIONS

ELECTRIC MULTIFUNCTION 91 lt
TEMP. 50°C - 265°C

TYPE NUMBER	X9F-6	X9F-5FI
HOB CONFIGURATION		
DESCRIPTION	6 GAS BURNERS 1 x 1 kW - 2 x 1,8 kW - 2 x 3 kW - 1 x 4,5 kW	5 INDUCTIONS 2 x 1,85 kW - 1 x 2,3 kW 2 flex zones x 2,1 kW
MAX CONSUMPTION	2,9 kW	10,3 kW
PRICE	NOK 57.000	NOK 79.000

STANDARD COLOUR

nero fumo NF

COLOURS ON DEMAND ODC-CE

nero BA, crema CR, bordeaux BR, ametista AA, sabbia SA, nuvola NA, celeste CE

OXFORD **HOODS**

FEATURES
- stainless steel body material
- 4 speeds
- LED lighting
- soft-touch integrated control panel
- switch-off timer
- new professional labyrinth filters

for extra accessories see page 77
PRODUCT DIMENSIONS at page 85

TYPE NUMBER	XK100	XK90
DESCRIPTION	1000mm width 500mm depth 554mm height 446mm height adjustment LED 4 + 2	900mm width 500mm depth 554mm height 446mm height adjustment LED 4 + 2
YEARLY CONSUMPTION	66 kWh	66 kWh
NOISE LEVEL	61 dB	61 dB
SUCTION POWER	900 m³	900 m³
PRICE	NOK 79.000	NOK 57.000

STANDARD COLOUR

nero fumo NF

COLOURS ON DEMAND ODC-CA

nero BA, crema CR, bordeaux BR, ametista AA, sabbia SA, nuvola NA, celeste CE

ACCESSORIES **COOKTOPS**

	TYPE NUMBER	FEATURES	LINE	PRICE
	SA-PB	Cast iron barbecue griddle (*in combination with DA-ST)	GENESI ASCOT *ENFASI *OXFORD	NOK 3000
	SA-PT	Cast iron fry top griddle	GENESI ASCOT	NOK 3000
	DA-TY	Stainless steel Teppanyaki plate	GENESI ASCOT ENFASI OXFORD	NOK 4500
	DA-ST	Cast iron fry top griddle with stainless steel support	ENFASI OXFORD	NOK 3800
	SA-SW	Cast iron wok support	GENESI ASCOT ENFASI OXFORD	NOK 1500
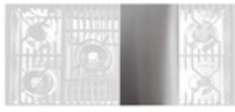	SA-CG	Stainless steel cover for burners (kit of 3)	GENESI ASCOT	NOK 3100

ACCESSORIES
OVENS

	TYPE NUMBER	FEATURES	LINE	PRICE
	SA-P7 SA-P9	Pizza kit with stainless steel frame and support - 60 cm oven 90 cm oven	GENESI ASCOT ENFASI OXFORD	NOK 2800 NOK 2800
	SA-PCX	Stainless steel liners for oven (one couple)	GENESI ASCOT ENFASI OXFORD	NOK 3800
	SA-GT	Telescopic sliding shelf supports (one couple)	GENESI ASCOT ENFASI OXFORD	NOK 2250
	SA-ML	Safety handles for deep tray (one couple)	GENESI ASCOT ENFASI OXFORD	NOK 1000
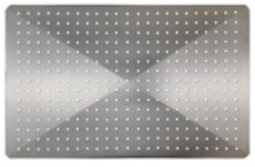	SA-L6V SA-L9V	Stainless steel steam tray - 60 cm oven 90 cm oven	GENESI ASCOT	NOK 2300 NOK 3100
	SA-L6X SA-L9X	Stainless steel deep tray - 60 cm oven 90 cm oven	GENESI ASCOT	NOK 2200 NOK 2400
	SA-L3 SA-L6 SA-L9	Enameled deep tray - 30 cm oven 60 cm oven 90 cm oven	GENESI ASCOT ENFASI OXFORD	NOK 950 NOK 1750 NOK 1900

ACCESSORIES
OVENS

	TYPE NUMBER	FEATURES	LINE	PRICE
	SA-G6R SA-G9R	Reinforced professional wire shelf - 60 cm oven 90 cm oven	GENESI ASCOT	NOK 3100 NOK 3900
	SA-G3C SA-G6C SA-G9C	Chrome wire shelf - 30 cm oven 60 cm oven 90 cm oven	GENESI ASCOT ENFASI OXFORD	NOK 2000 NOK 2300 NOK 3100
	SA-T3 SA-T6 SA-T9	Trivet griddle - 30 cm oven 60 cm oven 90 cm oven	GENESI ASCOT ENFASI OXFORD	NOK 2000 NOK 2300 NOK 3100

ACCESSORIES
FEET

	TYPE NUMBER	FEATURES	LINE	PRICE
	OA-PR	Adjustable plastic feet H 120-180mm	ENFASI	NOK 1000
	OA-PR NF	Adjustable plastic feet H 120-180mm NERO FUMO	ENFASI	NOK 1000
	SA-PR	Plastic feet H 35mm	GENESI	NOK 1000

ACCESSORIES
SPACERS

	TYPE NUMBER	FEATURES	LINE	PRICE
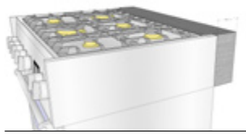	GA-D7-Q GA-D9-Q GA-D10-Q GA-D12-Q	10 cm stainless steel spacer - 70 cm cooker 90 cm cooker 100 cm cooker 120 cm cooker	GENESI	NOK 2500 NOK 2500 NOK 2600 NOK 2700
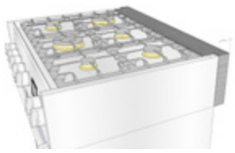	GA-D7-5-Q GA-D9-5-Q GA-D10-5-Q GA-D12-5-Q	5 cm stainless steel spacer - 70 cm cooker 90 cm cooker 100 cm cooker 120 cm cooker	GENESI	NOK 2500 NOK 2500 NOK 2600 NOK 2700
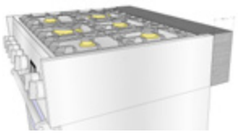	GA-D4 GA-D7 GA-D9 GA-D12	10 cm stainless steel spacer - 45 cm unit 70 cm unit 90 cm unit 120 cm unit	GENESI	NOK 2500 NOK 2500 NOK 2500 NOK 2600
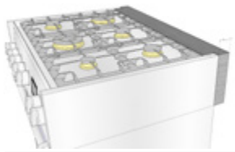	GA-D4-5 GA-D7-5 GA-D9-5 GA-D12-5	5 cm stainless steel spacer - 45 cm unit 70 cm unit 90 cm unit 120 cm unit	GENESI	NOK 2500 NOK 2500 NOK 2500 NOK 2700
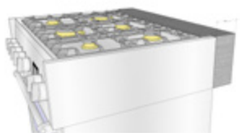	AA-D4 AA-D7 AA-D9 AA-D10 AA-D12	10 cm stainless steel spacer for cooker/unit - 45 cm 70 cm 90 cm 100 cm 120 cm	ASCOT	NOK 2500 NOK 2500 NOK 2600 NOK 2700
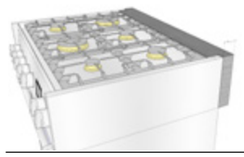	AA-D4-5 AA-D7-5 AA-D9-5 AA-D10-5 AA-D12-5	5 cm stainless steel spacer for cooker/unit- 45 cm 70 cm 90 cm 100 cm 120 cm	ASCOT	NOK 2500 NOK 2500 NOK 2600 NOK 2700
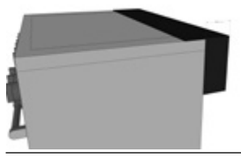	OA-D9 OA-D10 OA-D9 NF OA-D10 NF	10 cm stainless steel spacer - 90 cm cooker 100 cm cooker 10 cm nero fumo spacer - 90 cm cooker 100 cm cooker	ENFASI	NOK 2500 NOK 2600 NOK 2500 NOK 2600
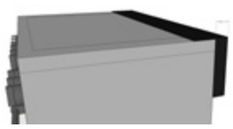	OA-D9-5 OA-D10-5 OA-D9-5 NF OA-D10-5 NF	5 cm stainless steel spacer - 90 cm cooker 100 cm cooker 5 cm nero fumo spacer - 90 cm cooker 100 cm cooker	ENFASI	NOK 2500 NOK 2600 NOK 2500 NOK 2600

ACCESSORIES
COOKER SUPPORTS

	TYPE NUMBER	FEATURES	LINE	PRICE
	SA-SZ4-Q SA-SZ7-Q SA-SZ7-D-Q SA-SZ9-Q SA-SZ10-Q SA-SZ10-T-Q SA-SZ12-Q	5 cm cooker/unit support and plinth - 45 cm 70 cm 70/2 90 cm 100 cm 100/3 120 cm	GENESI	NOK 2500 NOK 2500 NOK 2500 NOK 2500 NOK 2600 NOK 2600 € 75
	SA-SZ4-3-Q SA-SZ7-3-Q SA-SZ7-3-D-Q SA-SZ9-3-Q SA-SZ10-3-Q SA-SZ10-3-T-Q SA-SZ12-3-Q	3 cm cooker/unit support and plinth - 45 cm 70 cm 70/2 90 cm 100 cm 100/3 120 cm	GENESI	NOK 2500 NOK 2500 NOK 2500 NOK 2500 NOK 2600 NOK 2600 NOK 2700
	SA-SZ7-FR-Q SA-SZ7-3-FR-Q	5 cm wine cellar support and plinth 3 cm wine cellar support and plinth	GENESI	NOK 2500 NOK 2500
	SA-SZ7-LVS-Q SA-SZ7-3-LVS-Q	5 cm dishwasher support and plinth 3 cm dishwasher support and plinth	GENESI	NOK 2500 NOK 2500
	SA-AZ4 SA-AZ7 SA-AZ7-D SA-AZ9 SA-AZ10 SA-AZ10-T SA-AZ12	5 cm cooker/unit support and plinth - 45 cm 70 cm 70/2 90 cm 100 cm 100/3 120 cm	ASCOT	NOK 2500 NOK 2500 NOK 2500 NOK 2500 NOK 2600 NOK 2600 NOK 2700
	SA-AZ4-3 SA-AZ7-3 SA-AZ7-3-D SA-AZ9-3 SA-AZ10-3 SA-AZ10-3-T SA-AZ12-3	3 cm cooker/unit support and plinth - 45 cm 70 cm 70/2 90 cm 100 cm 100/3 120 cm	ASCOT	NOK 2500 NOK 2500 NOK 2500 NOK 2500 NOK 2600 NOK 2600 NOK 2700
	SA-AZ7-LVS SA-AZ7-3-LVS	5 cm dishwasher support and plinth 3 cm dishwasher support and plinth	ASCOT	NOK 2500 NOK 2500
	SA-XZ9 SA-XZ10 SA-XZ10-T	5 cm cooker support and plinth - 90 cm cooker 100 cm cooker 100/3 cooker	ENFASI/3 OXFORD	NOK 2500 NOK 2600 NOK 2600
	SA-XZ9-3 SA-XZ10-3 SA-XZ10-3-T	3 cm cooker support and plinth - 90 cm cooker 100 cm cooker 100/3 cooker	ENFASI/3 OXFORD	NOK 2500 NOK 2600 NOK 2600
	SA-XZ9-7 SA-XZ10-7 SA-XZ10-7-T	7 cm cooker support and plinth - 90 cm cooker 100 cm cooker 100/3 cooker	ENFASI/3 OXFORD	NOK 2500 NOK 2600 NOK 2600

ACCESSORIES

SPLASHBACKS AND COVERS

	TYPE NUMBER	FEATURES	LINE	PRICE
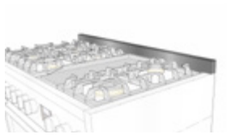		6 cm splashback -		
	SA-AG7-Q SA-AG9-Q SA-AG10-Q SA-AG12-Q	70 cm cooker 90 cm cooker 100 cm cooker 120 cm cooker	GENESI	NOK 2850 NOK 3000 NOK 3150 NOK 3200
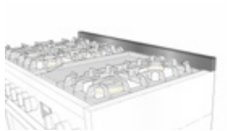		6 cm splashback -		
	SA-AG4 SA-AG7 SA-AG9 SA-AG12	45 cm unit 70 cm unit 90 cm unit 120 cm unit	GENESI	NOK 2850 NOK 2850 NOK 3000 NOK 3200
		5 cm deep s.steel backside cover -		
	SA-BP4 SA-BP7 SA-BP9 SA-BP10 SA-BP12	45 cm 70 cm 90 cm 100 cm 120 cm	GENESI	NOK 7400 NOK 7400 NOK 7400 NOK 7400 NOK 7400
		5 cm deep s.steel backside cover -		
	AA-BP4 AA-BP7 AA-BP9 AA-BP10 AA-BP12	45 cm 70 cm 90 cm 100 cm 120 cm	ASCOT	NOK 7400 NOK 7400 NOK 7400 NOK 7400 NOK 7400
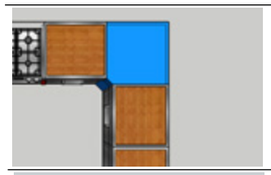	A7T-A	s.steel corner plug 70 cm x 70 cm. Colours on demand: nero (BA), crema (CR), bordeaux (BR), antracite (AN), sabbia (SA), nuvola (NA), celeste (CE), ametista (AA)	ASCOT	NOK 5700
	AA-EGI	s.steel front cover for in-line or island solution Colours on demand: nero (BA), crema (CR), bordeaux (BR), antracite (AN), sabbia (SA), nuvola (NA), celeste (CE), ametista (AA)	ASCOT	NOK 2000
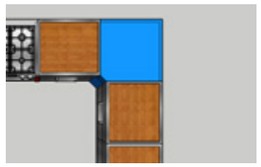	G7T-A	s.steel corner plug 70 cm x 70 cm	GENESI	NOK 5700
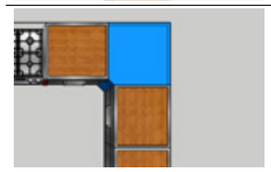	GMA-7	s.steel corner structure 70 cm x 70 cm	GENESI	NOK 1200
	GA-EGI	s.steel front cover for in-line or island solution	GENESI	NOK 2000

ACCESSORIES

HOODS

	TYPE NUMBER	FEATURES	LINE	PRICE
		Stainless steel splashback -		
	SK70 SK90 SK100 SK120	70 x 75 x 1 cm 90 x 75 x 1 cm 100 x 75 x 1 cm 117,2 x 75 x 1 cm	GENESI ENFASI	NOK 3250 NOK 3900 NOK 4500 NOK 5000
		Stainless steel splashback -		
	ASK70 ASK90 ASK100 ASK120	70 x 75 x 1 cm 90 x 75 x 1 cm 100 x 75 x 1 cm 117,2 x 75 x 1 cm	ASCOT	NOK 3250 NOK 3900 NOK 4500 NOK 5000
	SA-FKS	Carbon filter kit for AKL and XK series hoods	GENESI ASCOT OXFORD	NOK 1400
	SA-FKEL	Carbon filter foor EKL series hoods	ENFASI	NOK 1400
	SA-FKM	Plasma filter for Enfasi Mistral	ENFASI	NOK 19000

ACCESSORIES

CLEANING

	TYPE NUMBER	FEATURES	LINE	PRICE
	SA-KP	Care and maintenance kit	GENESI ASCOT ENFASI OXFORD	NOK 1000

ACCESSORIES
MODULAR SYSTEM

	TYPE NUMBER	FEATURES	LINE	PRICE
	MPC	Semi-pro rotating sink mixer with extractable double-jet handshower	GENESI ASCOT	NOK 7500
	SA-PP7 SA-PP9 SA-PP12	Benchwood cutlery tray for drawer- 70 cm 90 cm 120 cm	GENESI ASCOT	NOK 4500 NOK 7500 NOK 11000
	SA-PT7 SA-PT9 SA-PT12	Dishes and pots organizer for drawer - 70 cm 90 cm 120 cm	GENESI ASCOT	NOK 1600 NOK 2200 NOK 2600
	SA-PTKB	Kit of 3 pins for dishes and pots organizer	GENESI ASCOT	NOK 920
	SA-HPL4 QUERCIA SA-HPL7 QUERCIA SA-HPL9 QUERCIA SA-HPL12 QUERCIA	HPL chopping board for working tables - oak wood finishing 45 cm 70 cm 90 cm 120 cm	GENESI ASCOT	NOK 4000 NOK 5900 NOK 10000 NOK 12000
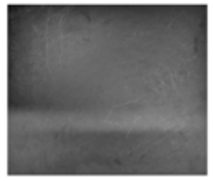	SA-HPL4 LAVAGNA SA-HPL7 LAVAGNA SA-HPL9 LAVAGNA SA-HPL12 LAVAGNA	HPL chopping board for working tables - blackboard finishing 45 cm 70 cm 90 cm 120 cm	GENESI ASCOT	NOK 4000 NOK 5900 NOK 10000 NOK 12000

PRODUCT DIMENSIONS

GENESI 120

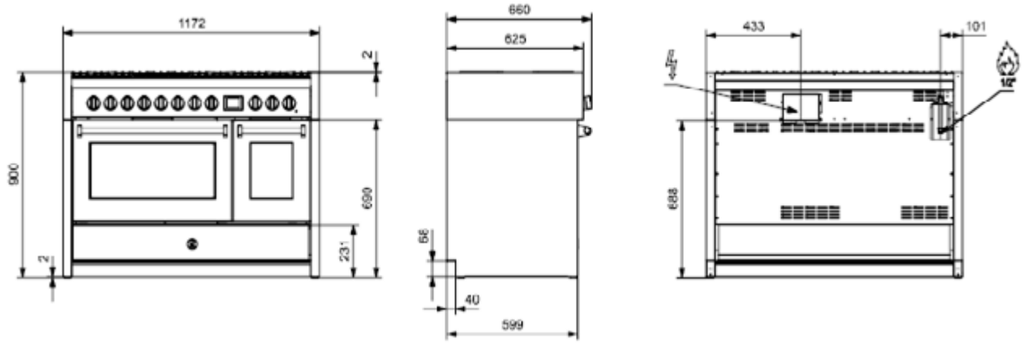

GENESI 100 - GENESI 100|3

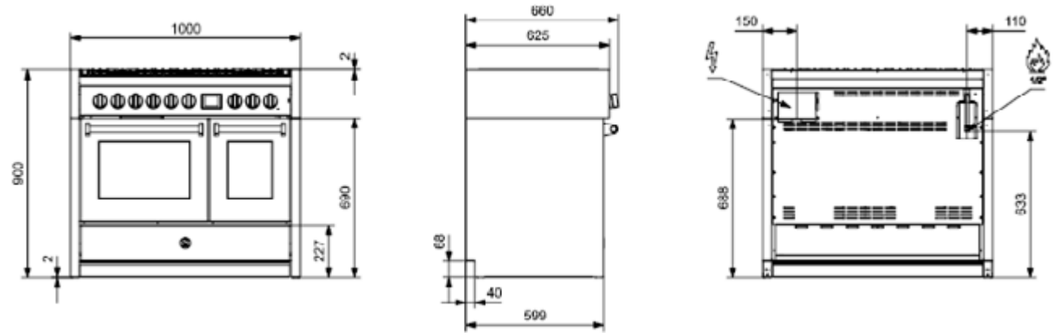

GENESI 90

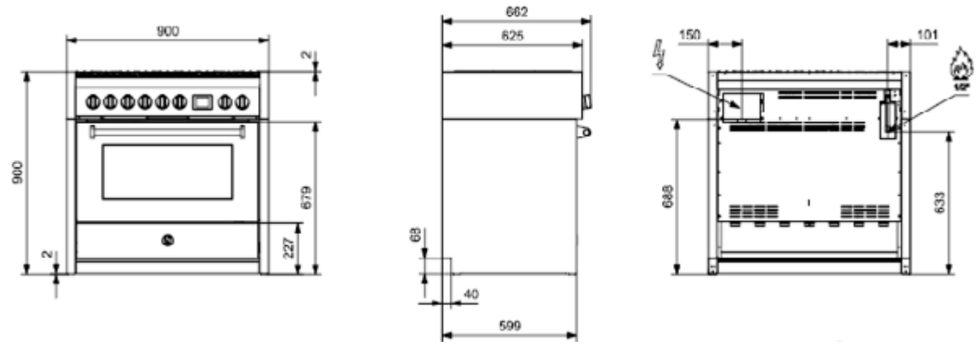

GENESI 70 - GENESI 70|2

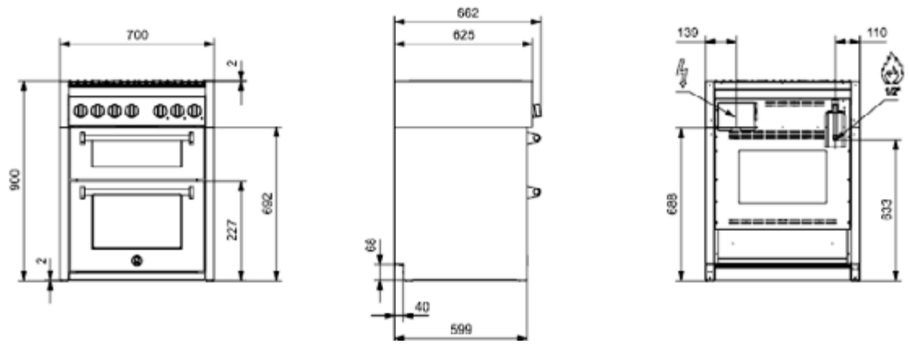

PRODUCT DIMENSIONS

ASCOT 120

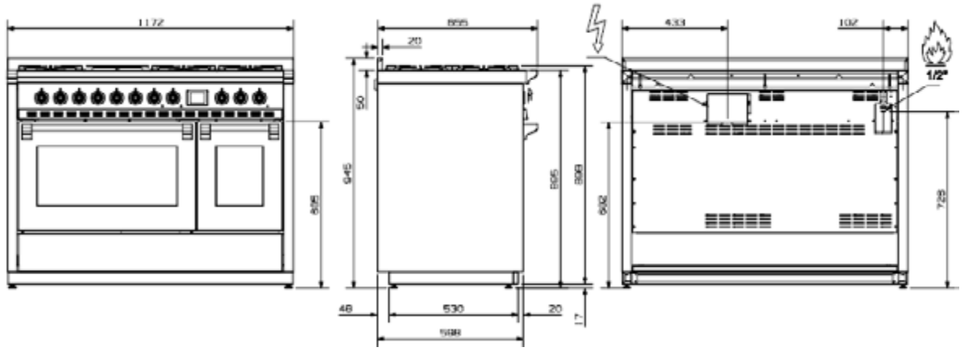

ASCOT 100 - ASCOT 100|3

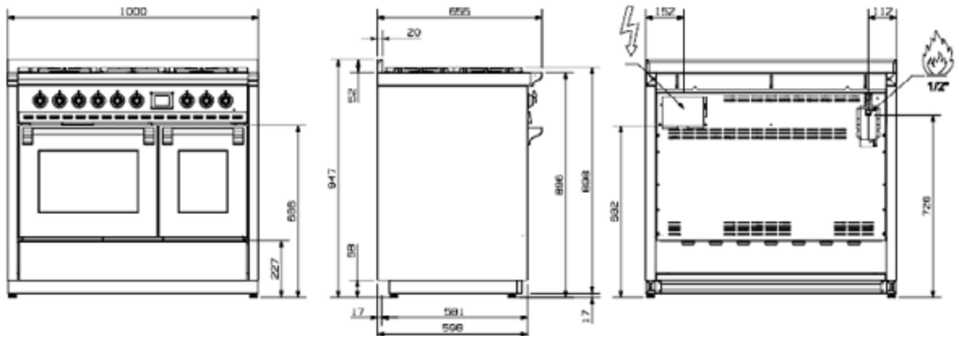

ASCOT 90

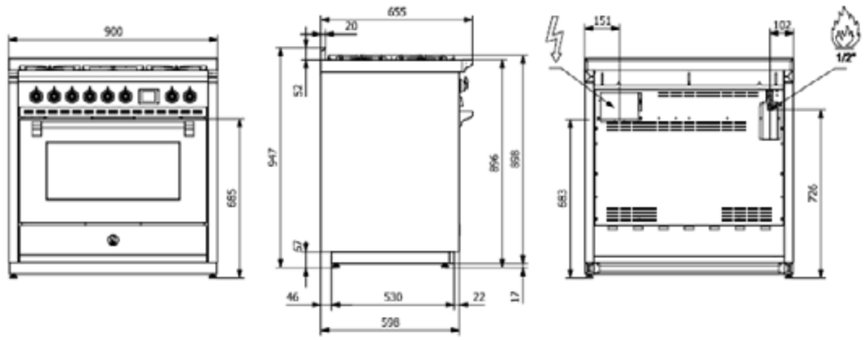

ASCOT 70 - ASCOT 70|2

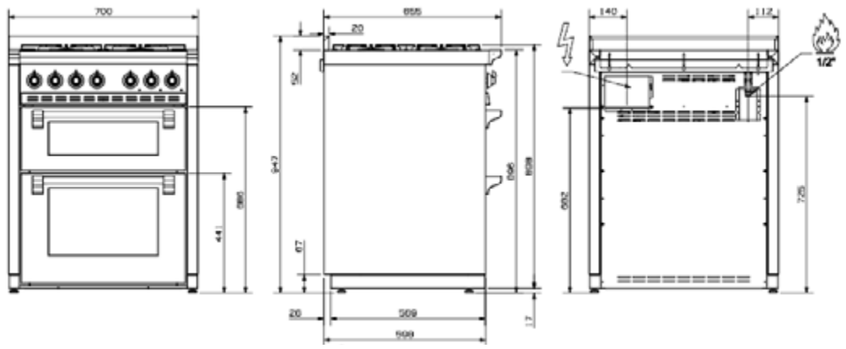

PRODUCT DIMENSIONS

ENFASI 100

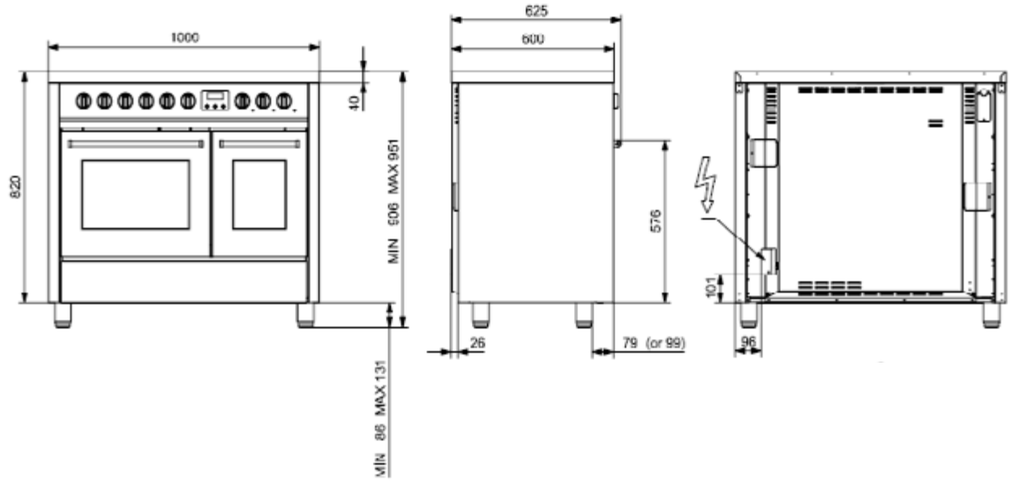

ENFASI 100|3

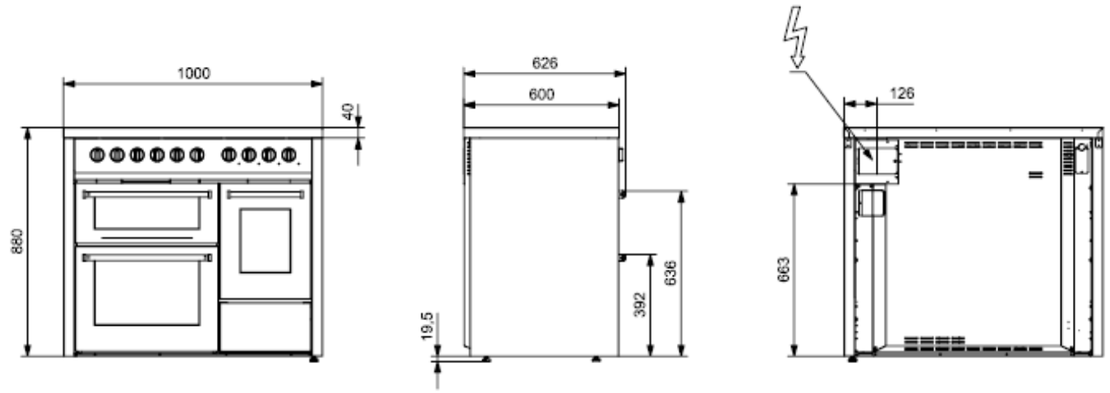

ENFASI 90

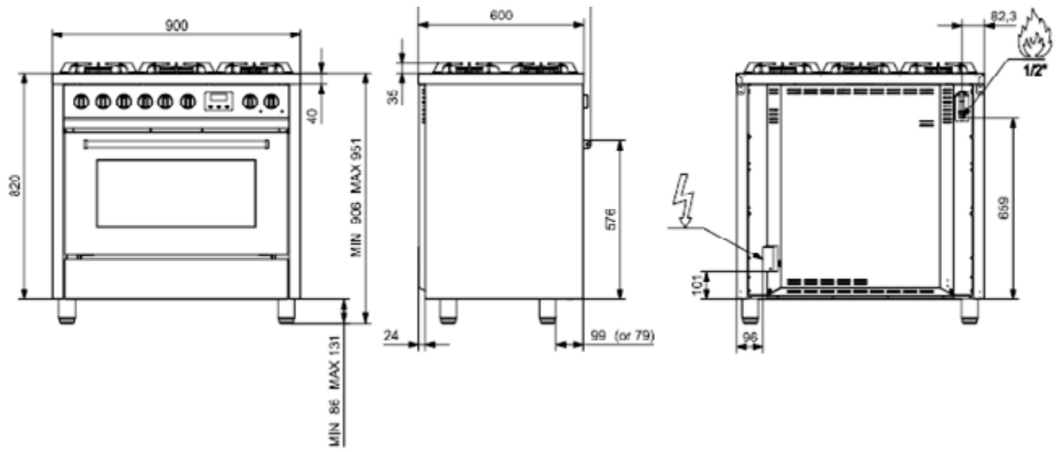

PRODUCT DIMENSIONS

OXFORD 100

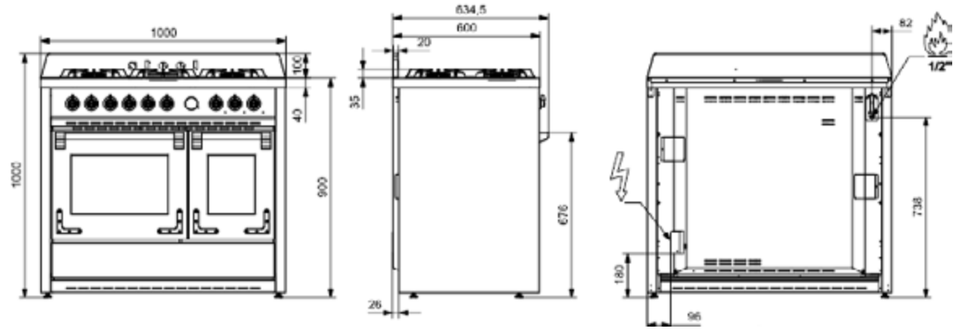

OXFORD 100|3

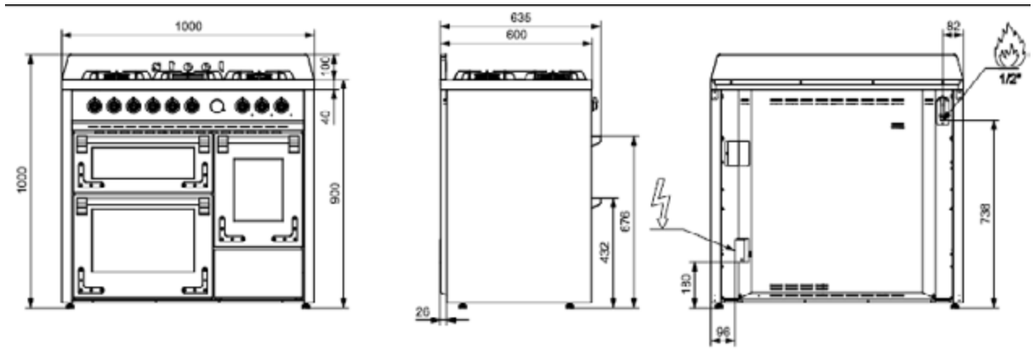

OXFORD 90

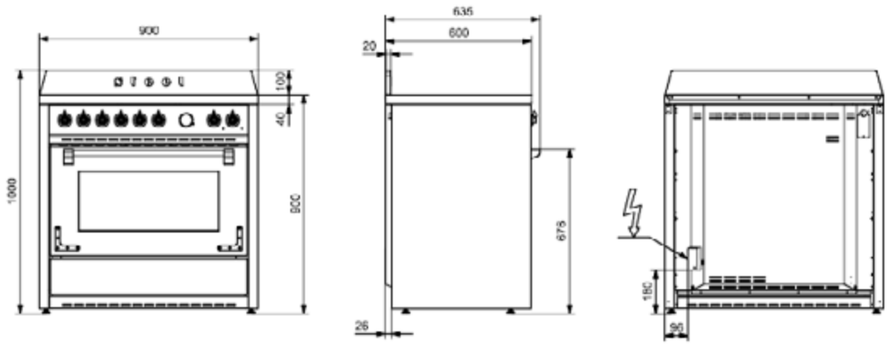

PRODUCT DIMENSIONS

GENESI 60X60

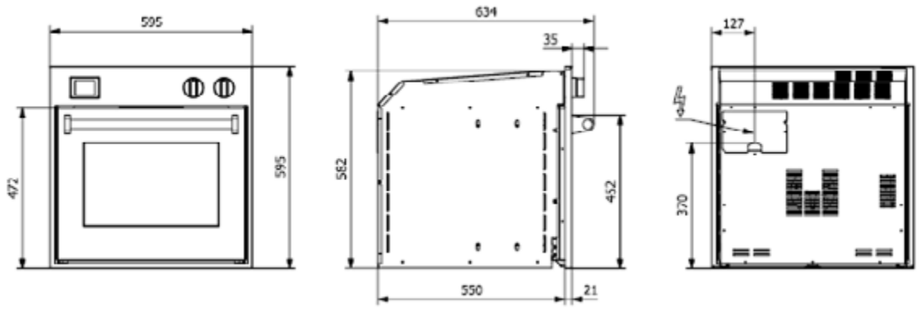

GENESI 60X90

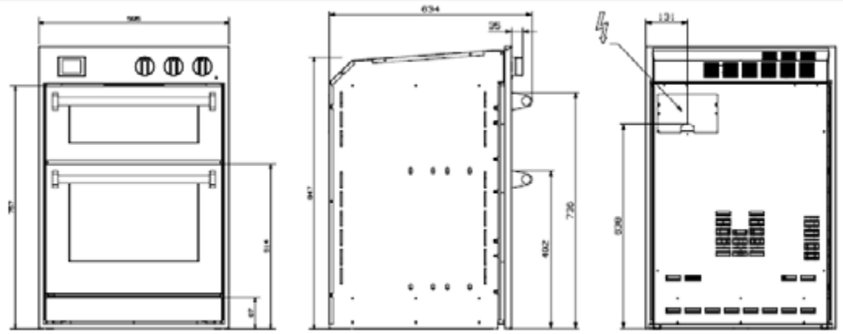

GENESI 90X60

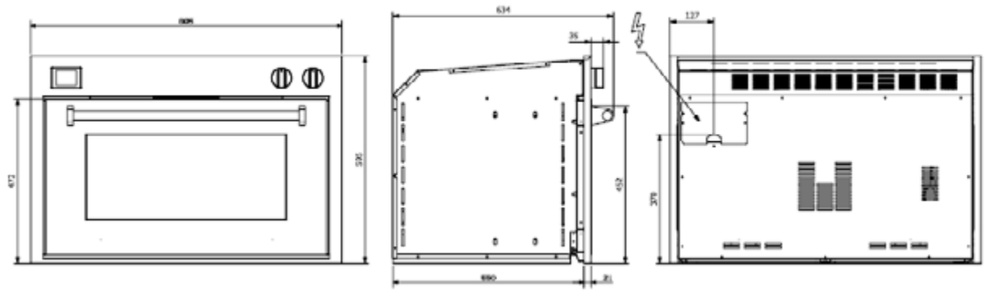

GENESI 60X45

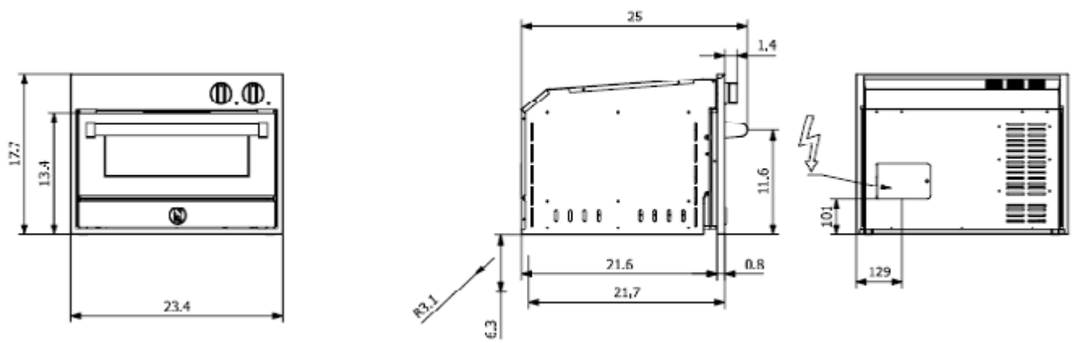

PRODUCT DIMENSIONS

ASCOT 60X60

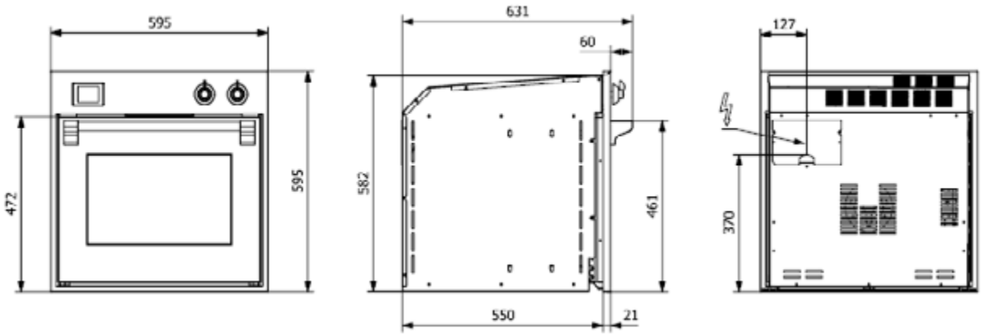

ASCOT 60X90

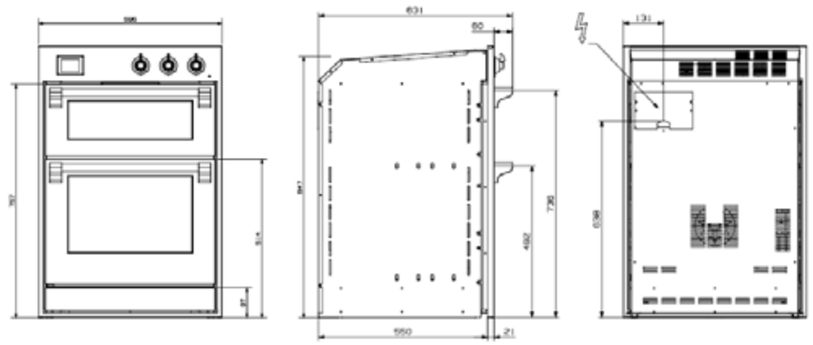

ASCOT 90X60

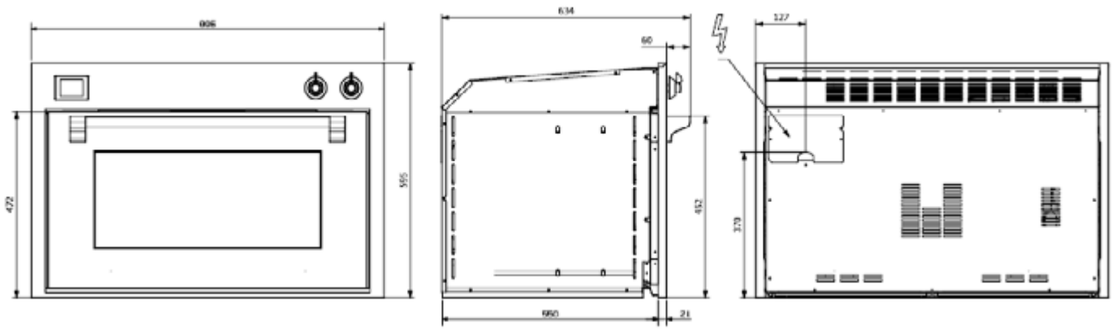

PRODUCT DIMENSIONS

ENFASI 60X60

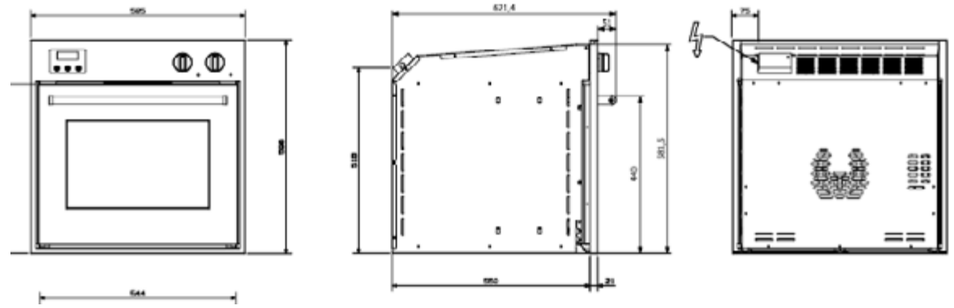

ENFASI 60X90

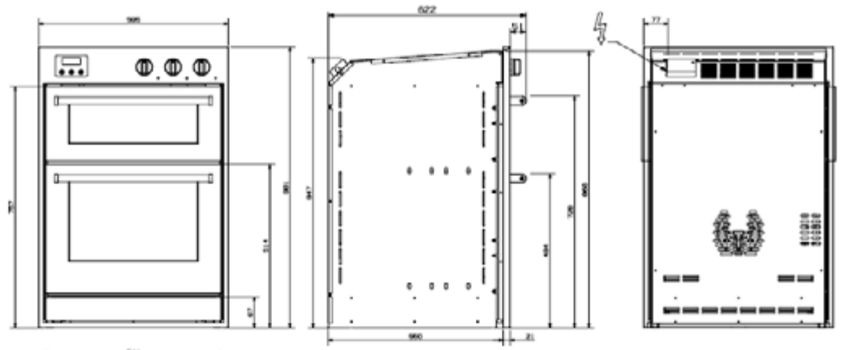

PRODUCT DIMENSIONS

GENESI HOODS

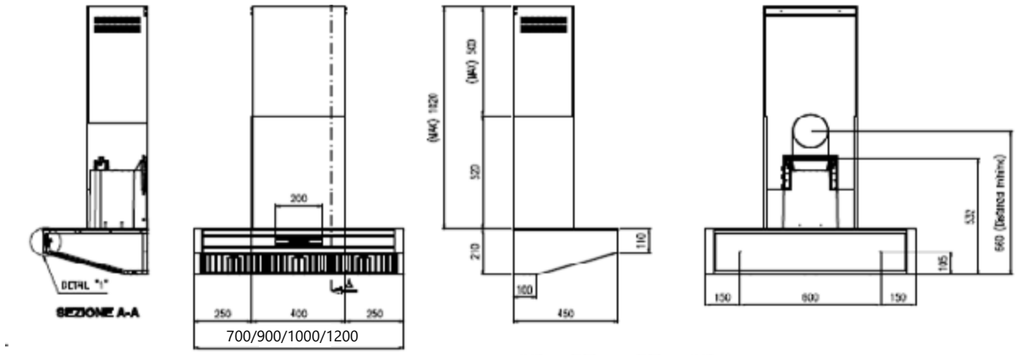

ASCOT - OXFORD HOODS

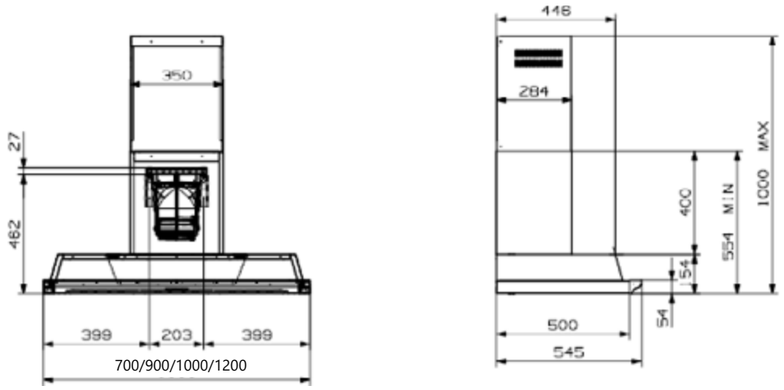

ENFASI HOODS

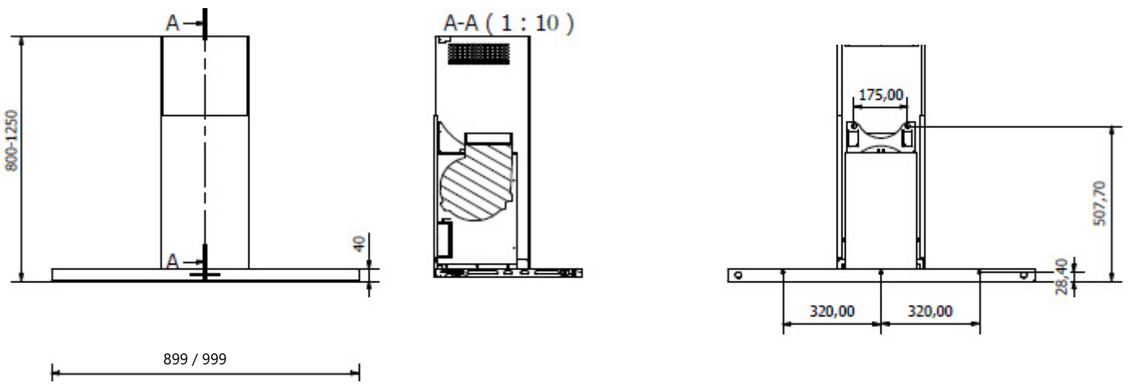

GENESI - ASCOT - ENFASI FRENCH DOOR

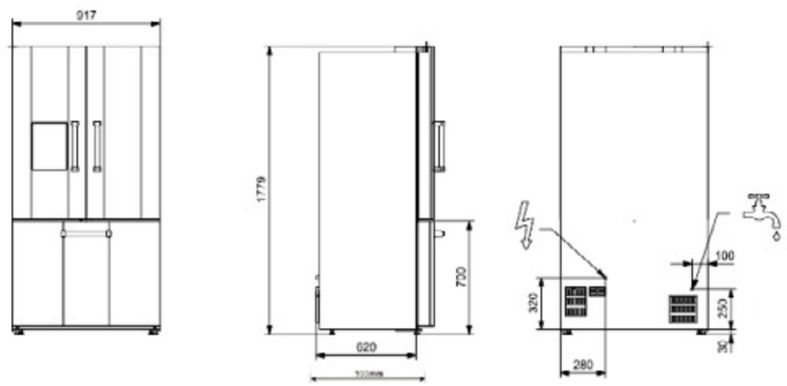

PRODUCT DIMENSIONS

GENESI MODULAR SYSTEM 45

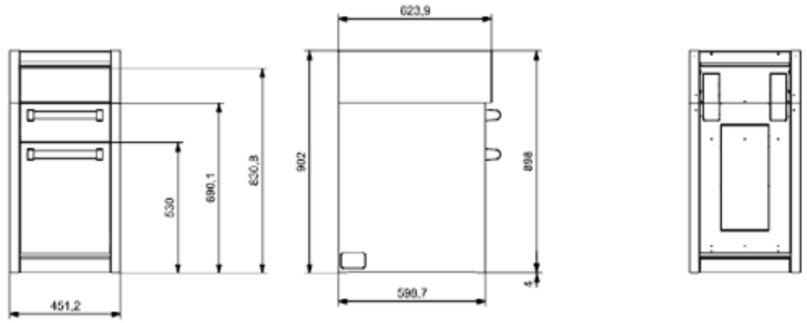

GENESI MODULAR SYSTEM 70

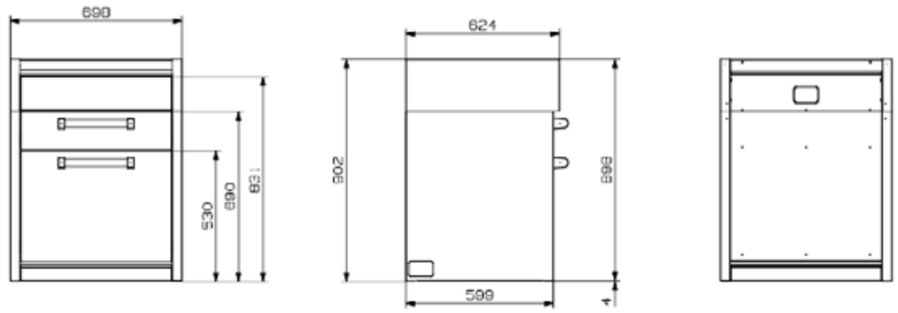

GENESI MODULAR SYSTEM 90

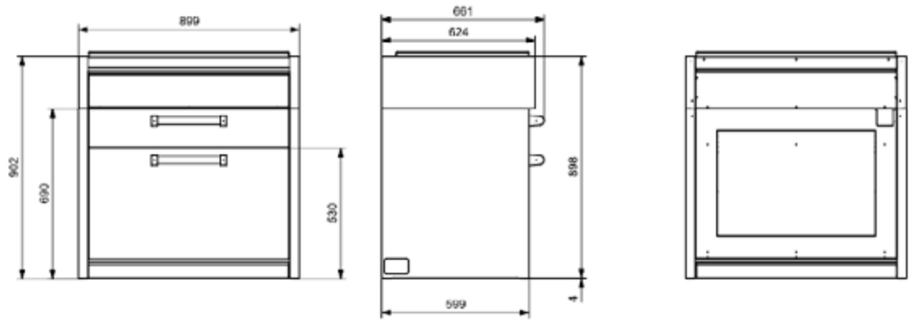

GENESI MODULAR SYSTEM 120

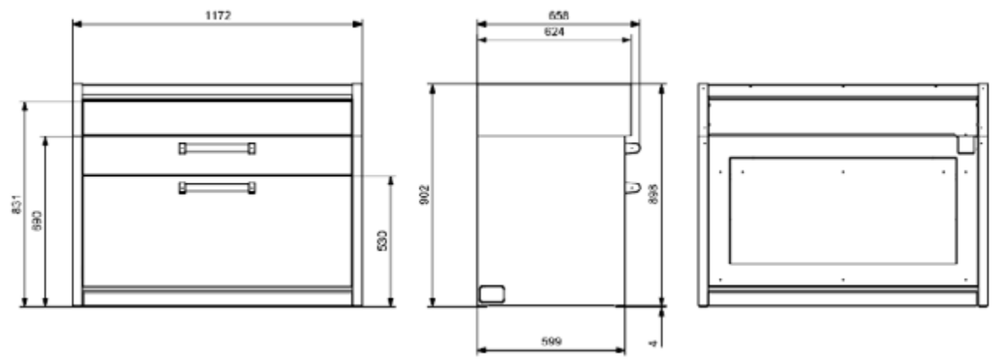

PRODUCT DIMENSIONS

ASCOT MODULAR SYSTEM 45

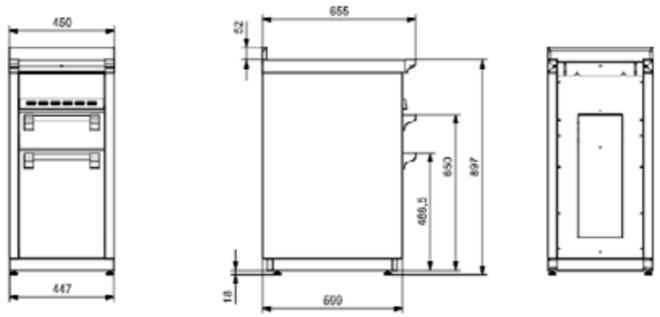

ASCOT MODULAR SYSTEM 70

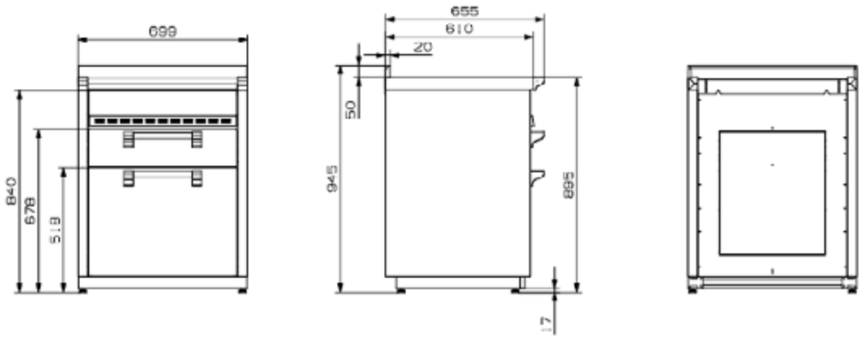

ASCOT MODULAR SYSTEM 90

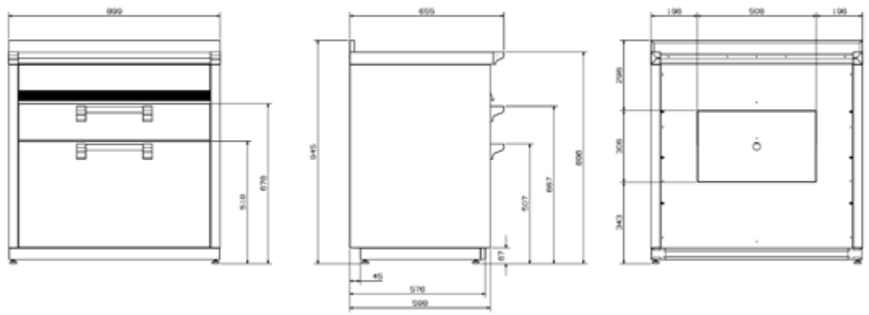

ASCOT MODULAR SYSTEM 120

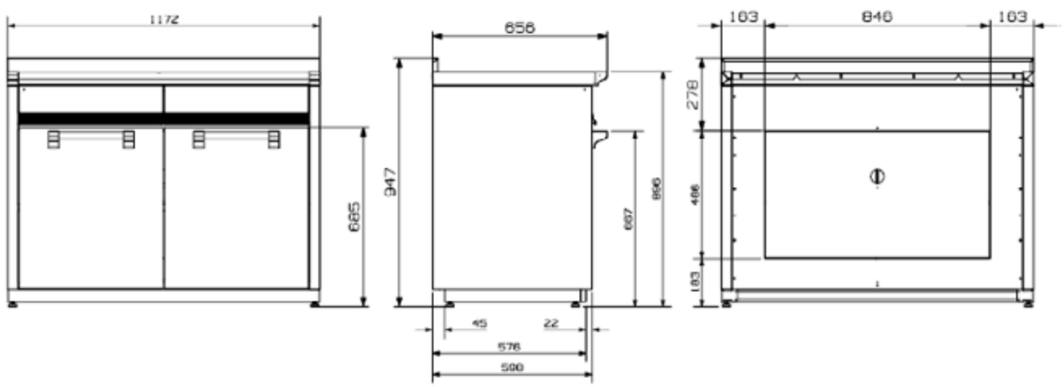

Eklsklusiv STEEL distributør i Norge

Falcon Norge AS
PB 56, 2830 Raufoss
t: 611 00 600
e: post@falconnorge.no

Showroom
Vollsveien 13B, 1366 Lysaker